RELOADED EZ DOWN
The safest way to lift a tailgate

EZDown Reloaded Instruction – 1st Fitment

EZDown Reloaded Hilux/Revo 2016 - RL0050

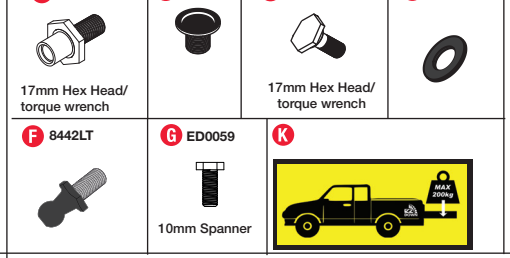

1
RHS and LHS are determined when sitting in the Drivers side of the Vehicle.

NB: Remove rubber grommets as shown slides 2 - 4 and discard

NB: Locktite all fixing/mounting points where applicable.

After full fitment remove labels from the cable.

2
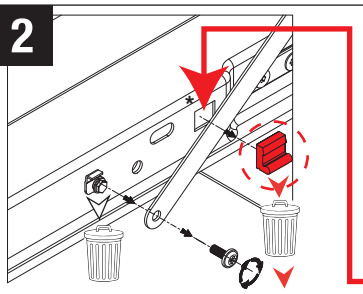

NB: Remove RHS rubber grommet from tailgate as shown

Tooling
Phillips head screw driver No 3

3


NB: Remove RHS rubber grommet from side panel as shown

4
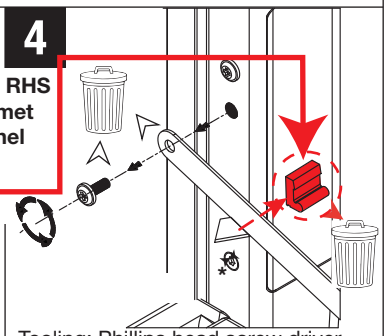

Tooling: Phillips head screw driver No 3. If OEM Bolt is very tight apply heat to remove e.g Heat Gun

5
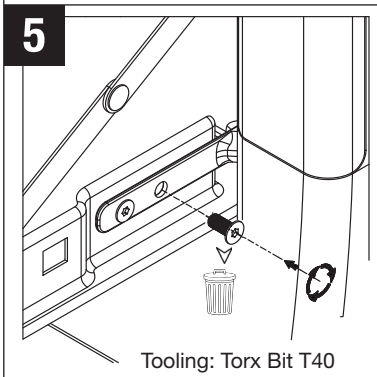

Tooling: Torx Bit T40

6
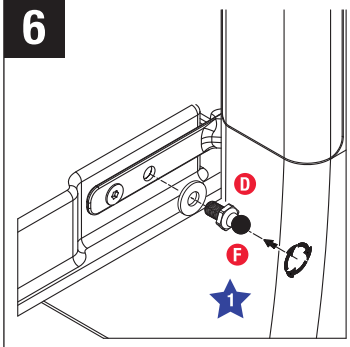

13mm Hex head spanner

7
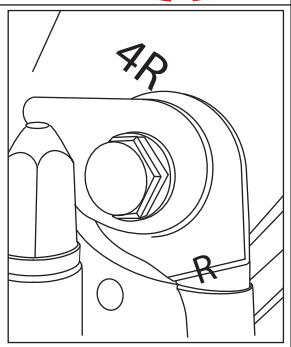

Fit RHS as indicated on cable stickers, then remove stickers.

8
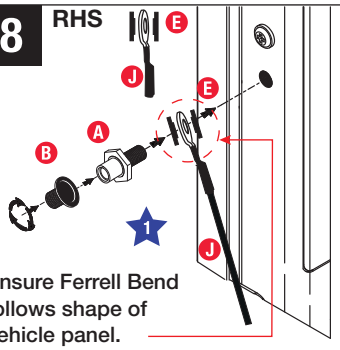

Ensure Ferrell Bend follows shape of vehicle panel.

17mm Hex head spanner

9
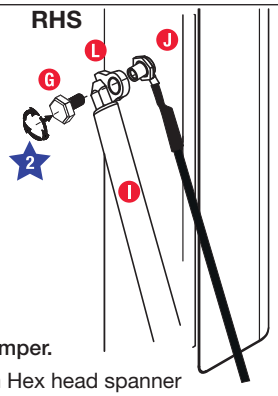

Fit damper.
10mm Hex head spanner

10
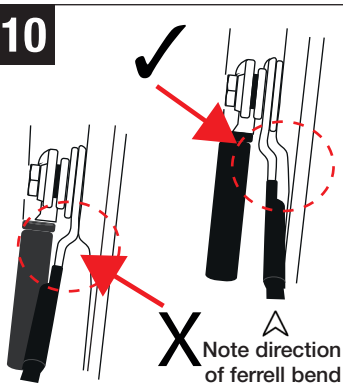

Note direction of ferrell bend

11
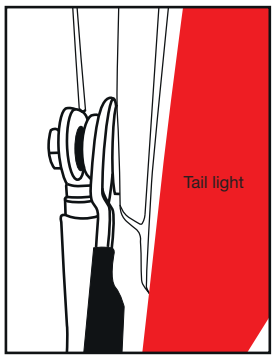

12
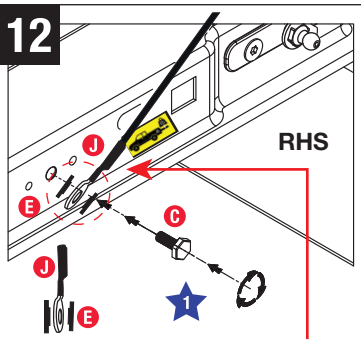

Ensure Bottom Ferrule bend is facing away from Tailgate.

13
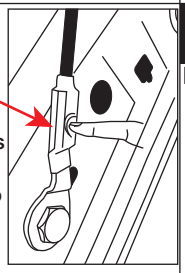

If Cable does not align automatically and cable protrudes when bin is closed, place pressure onto Ferrule and press toward vehicle tailgate.

In case cable is too tight against the tailgate slightly pull away from the tailgate and straighten the cable.

14
RHS

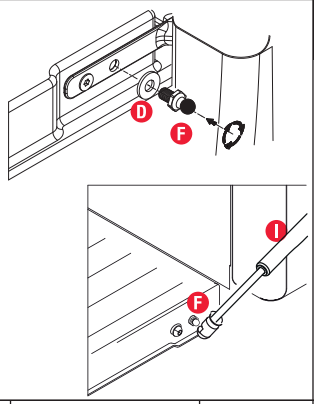

15
NB: HAVE YOU REMOVED YOUR RUBBER GROMMETS - RHS ONLY (2 IN TOTAL) AS INDICATED IN SLIDES 2 - 4?

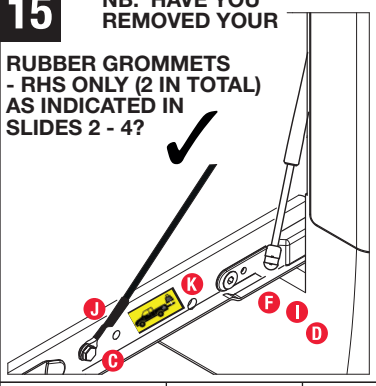

Online video installation

FITTING CODE	MANUFACTURER	MODEL TYPE	YEAR	STOCKIST	PRODUCT	REVISION	LABOUR	DATE	PAGE
RL0050	TOYOTA	REVO	2016 onwards	GENERAL USE	EZDOWN RELOADED	9	25min	12/03/2025	1
TORQUE – N.m	1 27N.m±2N.m			2 15N.m±2N.m		www.ezdownshop.co.za			

NB: After installation please close tailgate gently to ensure that there is no interference with any hardware.

PROUDLY SOUTH AFRICAN

IMPORTANT:
No liability will be incurred by Industrial Specialised Applications company, for injury, death, or property damage caused by a product which has been set up, operated, and/or installed contrary to EZDown installation guide/manual, or which has been subjected to misuse, negligence, or accident, or which has been repaired or altered by anyone other than Industrial Specialised Applications, or which has been used in a manner or for a purpose for which the product was not designed.

RELOADED EZDOWN
The safest way to lift a tailgate

EZDown Reloaded Instruction – 2nd Fitment

EZDown Reloaded Hilux RL0050

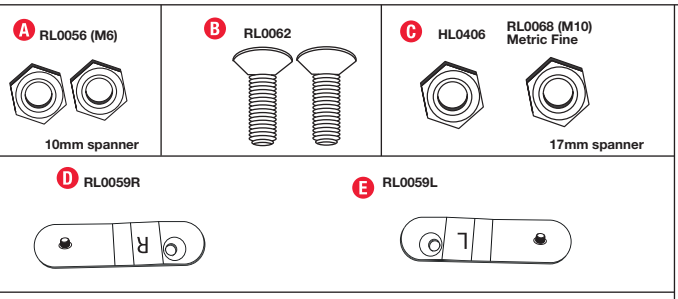

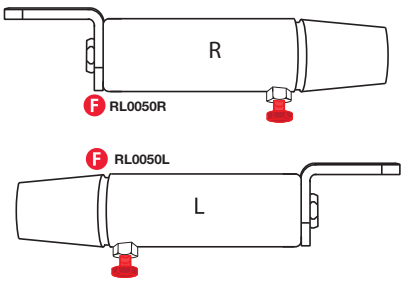

1

Right Hand Side (RHS) and Left Hand Side (LHS) are determined when sitting in the Drivers side of the Vehicle.

CAUTION:
Do not remove the red bolt from cylinder E until fully installed - if you do you will loose the pre-tention.

2

Open tailgate.

See slide 4 & 5 for area where nut C needs to be fitted.

Loosen Half a Turn before installing fitting Locking Nut shown in Slide 4

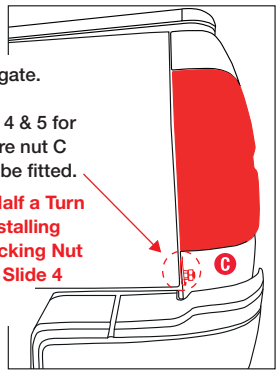

3

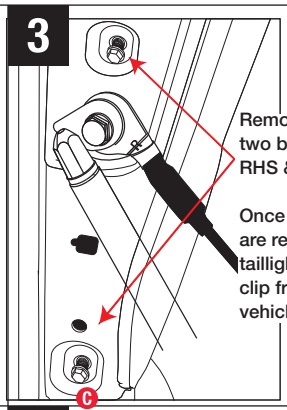

Remove the two bolts on RHS & LHS.

Once the bolts are removed the taillights will clip from the vehicle body.

4

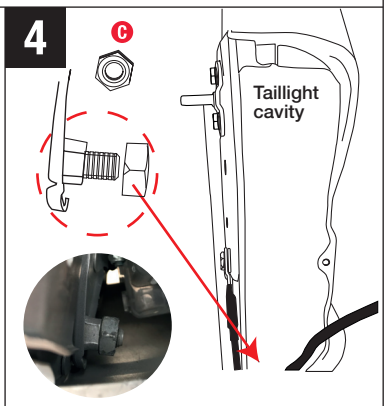

5

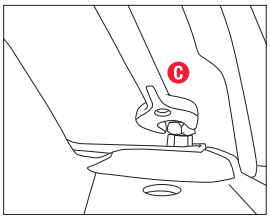

At the bottom install the locking nut C supplied onto the existing bolt.
See slide 4. Repeat for LHS.

Replace taillight and bolts.

6

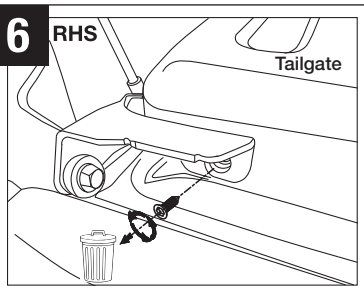

NB: View direction from inside the Vehicle Bin looking towards the Tailgate

Remove the bolt on the bracket and throw away.

7

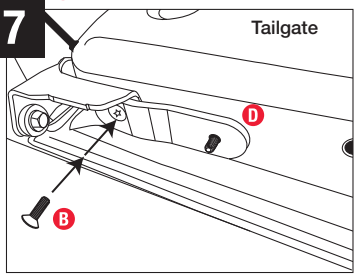

NB:
View from inside vehicle looking out.

Insert bracket and fasten Screw (B)

8

Repeat slides 2 to 7 on LHS.

9

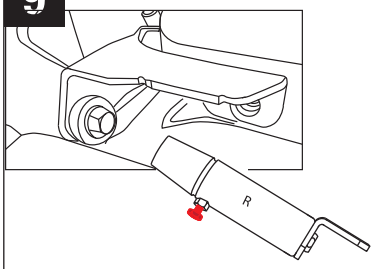

RHS - Fit Cylinder in position shown by sliding over end bolt and will lock in this position - see slide 10

10

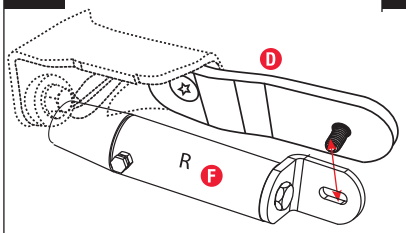

Cylinder slides over the bolt on the bracket and then over the stud D.

Ensure cylindar locks flush onto the nut.

11

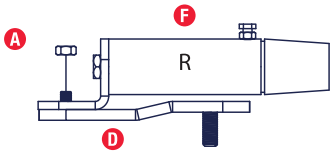

Fix M6 Nut (A) onto stud and fasten when tailgate is still open.

12

Repeat slides 9 to 12 for LHS.

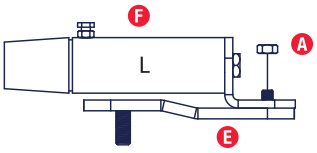

13

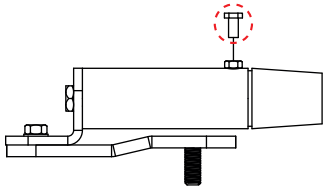

REMOVE RED BOLT ON BOTH RHS AND LHS.

14

Ensure both Brackets as indicated with * are in alignment.

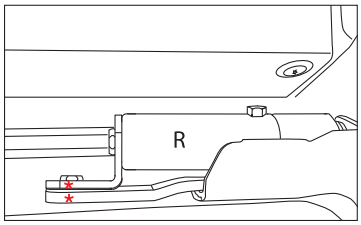

15

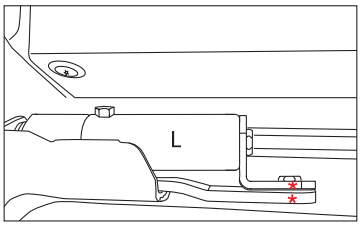

This is what it will looks like on the inside when correctly installed.

16

NOTE:
Tailgate will fall very slowly the first cycle in order for the Reloaded to set.

SHOULD YOU WANT TO INCREASE YOUR PRELOAD OR REINSTALL YOUR PRELOAD PLEASE RETURN TO YOUR CLOSEST STOCKIST FOR ASSISTANCE

FITTING CODE	MANUFACTURER	MODEL TYPE	YEAR	STOCKIST	PRODUCT	REVISION	LABOUR	DATE	PAGE
RL0050	HILUX	REVO	2016 onwards	GENERAL USE	EZDown RELOADED	10	25min	24/3/2025	1
TORQUE – N.m	1 27N.m±2N.m		2 15N.m±2N.m			www.ezdownshop.co.za			

NB: After installation please close tailgate gently to ensure that there is no interference with any hardware.

PROUDLY SOUTH AFRICAN

IMPORTANT:
No liability will be incurred by Industrial Specialised Applications company, for injury, death, or property damage caused by a product which has been set up, operated, and/or installed contrary to EZDown installation guide/manual, or which has been subjected to misuse, negligence, or accident, or which has been repaired or altered by anyone other than Industrial Specialised Applications, or which has been used in a manner or for a purpose for which the product was not designed.