Video inserter

HDA-PCM60

New function:
interface reset
via external keypad!

Compatible with

Porsche vehicles with PCM 4.1, PCM 5.0 and PCM 6.0 infotainment with 10.9inch or 12.3inch monitor



Examples

Attention!
Video signal type of each video source must be preset in OSD-menu of corresponding video-input.

Product features

- **1 x CVBS/AHD input for rear-view camera**
- **1 x CVBS/AHD input for front camera**
- **2 x CVBS/AHD input for side cameras or additional after-market video-sources (e.g. USB devices, DVB-T2 tuner, etc.)**
- **All inputs NTSC and PAL compatible**
  Supported AHD resolutions 720p NTSC (30Hz)**, 720p PAL** (25Hz)**, 960p NTSC** (30Hz)**, 960p PAL** (25Hz)**, 1080p NTSC** (30Hz)**, 1080p PAL** (25Hz)
- **Automatic switchover to rear-view camera input while reverse gear is engaged**
- **Automatic front camera shift after reverse gear is engaged for 5, 10, 15 or 20 seconds**
- **Adjustable guide lines (fixed or dynamic) can be activated for rear-view camera (dynamic guide lines not available for all vehicles)**
- **PDC graphics can be activated (not available for all vehicles)**
- **Free picture while driving (ONLY for fed-in video sources)**

Table of contents

1 Before installation 3
1.1 Scope of delivery 3
1.2 Check interface compatibility with vehicle and accessories 4
1.3 Boxes and connections - Interface 5
1.4 Settings – 8 dip switch bench (interface functions) 6
1.4.1 Interface video inputs "V1-Left" and "V2 Right" (Dip 1-2) 6
1.4.2 Front camera input "V3-Front" (Dip 3) 6
1.4.3 Rear-view camera settings (dip 4) 7
1.4.4 Connection type of the rear-view camera (Dip 5) 7
1.4.5 Position of factory PDC display (Dip 7-8) 7
1.5 Settings – 4 dip switch bench right (head unit) 8
1.6 Settings – 4 dip switch bench left (head unit/monitor size) 8
1.7 Settings – 4 dip switch bench (CAN bus) 9

2 Installation 9
2.1 Place of connection 9
2.2 Connection schema 10
2.3 Connection - picture signal cable 11
2.4 Connection - cable sets, power supply and CAN bus or analogue without CAN bus 12
2.4.1 Connection with CAN bus 13
2.4.2 Analogue connection without CAN bus 14
2.5 Power supply outputs 15
2.5.1 Connection and power supply - Video sources Rear-view camera, front camera and 2 side cameras 16
2.5.2 Connection and power supply - video sources Rear-view camera, front camera and 2 video sources 17
2.6 After-market rear-view camera 18
2.6.1 Case 1: Reverse gear signal from CAN bus 18
2.6.2 Case 2: Reverse gear signal from analogue signal 19
2.7 After-market front camera 20
2.8 After-market side cameras 21
2.8.1 Case 1: Turn signals from CAN bus 21
2.8.2 Case 2: Turn signals from analogue signal 22
2.9 Audio insertion 23
2.10 Connection - video interface and external keypad 24
2.11 OSD menu settings 25

3 Operating the video interface 28
3.1 Via factory touch display 28
3.2 Via external keypad 29
3.3 Optional: Operating the video interface via the 'HDA-RC' remote control 29

4 Specifications 30

5 FAQ - Troubleshooting Interface functions - product-specific 30

6 FAQ - Troubleshooting Interface functions - general 31

7 Technical Support 33

Legal notice

The driver must not be distracted directly or indirectly by moving pictures while driving. This is prohibited by law in most countries/states. We therefore exclude all liability for damage to property and personal injury caused directly or indirectly by the installation and operation of this product. This product is only intended for displaying stationary menus (e.g. MP3 menu of USB devices) or pictures from (rear-view) cameras while driving.

Changes/updates to the vehicle software may impair the functionality of the interface. Software updates for our interfaces are provided to customers free of charge for up to one year after purchase of the interface. The interface must be sent in free of charge for the update. Costs for installation and removal will not be reimbursed.

1 Before installation

These instructions must be read before installation. Specialist knowledge is required for installation. The installation location of the interface must not be near sources of moisture or heat.

Before final installation in the vehicle, we recommend a test run after connection to ensure that the vehicle and interface are compatible. Due to production-related changes made by the vehicle manufacturer, there is always the possibility of incompatibility.

1.1 Scope of delivery



Note the serial number of the interface and keep the instructions for support purposes: _____

1.2 Check interface compatibility with vehicle and accessories

Requirements

Manufacturer	Compatible vehicles	Compatible systems
Porsche	Panamera (971) model years 2017 until 2021	PCM 4.1 (Harman) with 10.9inch or 12.3inch monitor
	911 (992) model years 2019 until 2021 Cayenne E3 (PO536) model years 2018 until 2021 Macan (95B) model years 2019 until 2021 Taycan (J1) model years 2019 until 2021	PCM 5.0 (Alpine) with 10.9inch or 12.3inch monitor
	911 (992) from model year 2022 Cayenne E3 (PO536) from model year 2022 Macan (95B) from model year 2022 Panamera (971) from model year 2022 Taycan (J1) from model year 2022	PCM 6.0 (Aptiv/Delphi) with 10.9inch or 12.3inch monitor

Limitations

CAN bus compatibility	The CAN bus compatibility of the interface may be limited for some vehicles, either completely or for individual functions. This may be noticeable both during installation and later. The interface with all video inputs can be operated with analogue switching signals without connection to the vehicle CAN bus. In this case, individual additional functions are omitted, see chapter *2.4.2 Analogue connection without CAN bus*.
Video only	Interface **does not** insert any **audio signals.** In order to insert audio signals, any factory audio AUX input or optional products must be used. (e.g. FM modulator). For HDMI source, the audio is output via an analogue audio output (3.5mm jack socket).
Factory rear-view camera	Automatic switching to rear-view camera input only takes place while reverse gear is engaged. Optional accessories are required for different switching times.
After-market front camera	Switching to front camera occurs automatically after shifting into reverse gear for 5, 10, 15 or 20 seconds (depending on the OSD menu setting). Manual switching to front camera is also possible via the external keypad.
Guide lines for rear-view camera and PDC	If the vehicle CAN bus is not fully compatible with the interface or if the connection is analogue, the dynamic guide lines and optical PDC display function cannot be used.

1.3 Boxes and connections - Interface

The video interface converts video signals from after-market sources into a video signal compatible with the factory head unit. This is inserted into the factory monitor via various switching options. It also reads digital signals from the vehicle CAN bus and converts them for its own functions.

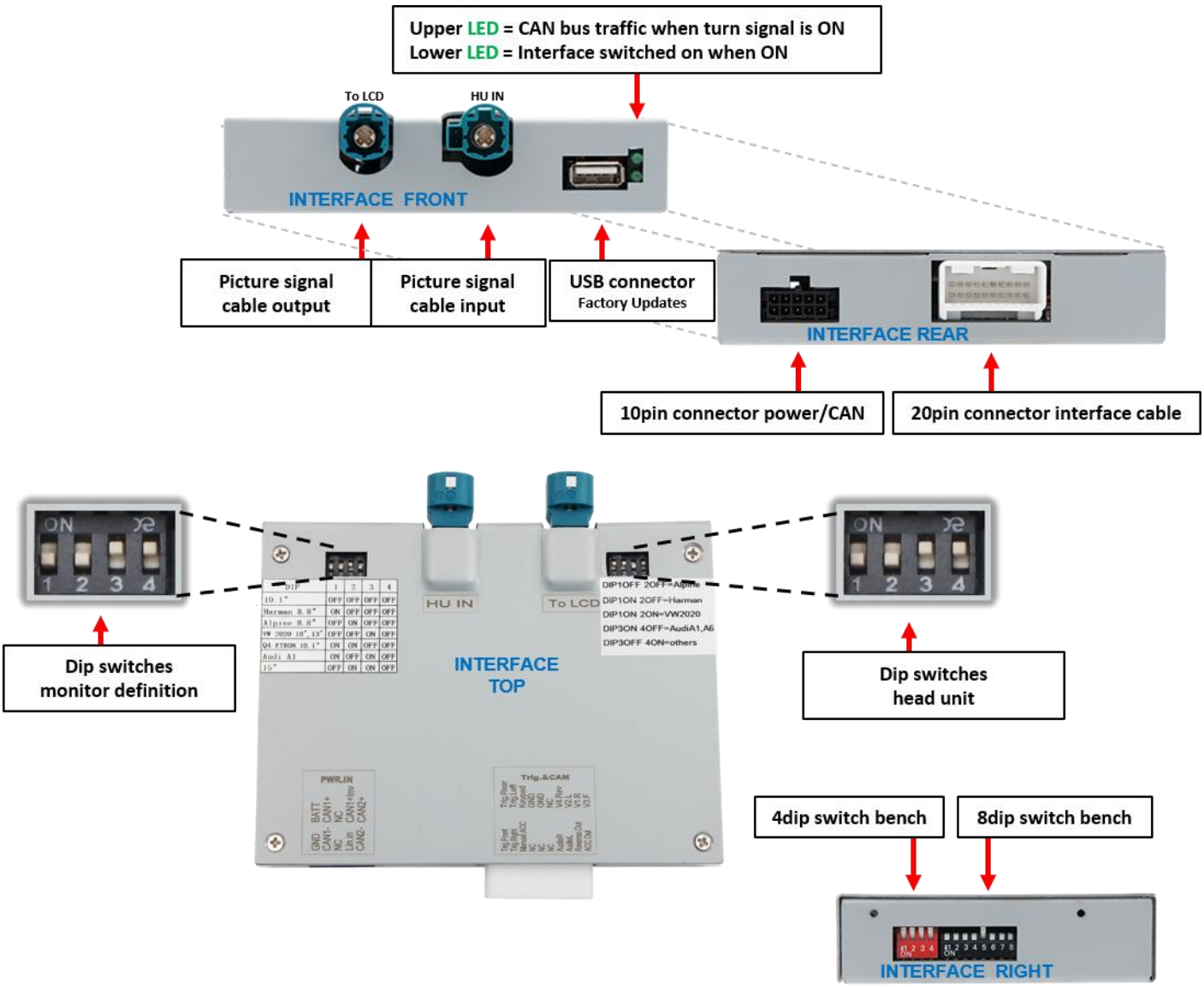

1.4 Settings – 8 dip switch bench (interface functions)



Interface box, right side, black

Dip position **UP = OFF** and **DOWN = ON**

Dip	Function	ON (down)	OFF (up)
1	Video 1 / V1-Left	activated	deactivated
2	Video 2 / V2-Right	activated	deactivated
3	Front camera / V3 front	activated*	deactivated
4	Type of rear-view camera (V4 reverse))	After-Market	Factory or none
5	Connection type of the After-market rear-view camera	-	V4 Reverse (CVBS/AHD)
6	No function	activated	deactivated
7	Position of PDC from factory**	left + no PDC	centre + right
8		centre + no PDC	left + right

Power reset interface after each dip change to activate changes!

* Switching to front camera takes place automatically for 5, 10, 15 or 20 seconds (depending on the OSD menu setting) after shifting into reverse gear**.**

**** The position of the PDC display is not adjusted; instead, the interface is told where to find the factory PDC graphic.** After activation, the PDC display is always located to the right of the picture from an aftermarket rear-view camera.

If there are issues with the factory image and/or the inserted image, or if any other malfunctions occur, press the external button for 10 seconds to reset the interface.

See following chapters for detailed information about 8dip switch bench.

1.4.1 Interface video inputs "V1-Left" and "V2 Right" (Dip 1-2)

Dip 1 (Dip 2) = **ON activates** the CVBS/AHD input **V1-Left** (**V2 Right**) for side camera or other video sources. Only activated video inputs can be accessed - both with automatic and manual switching. It is recommended to only activate used inputs, to avoid accidental switching.

1.4.2 Front camera input "V3-Front" (Dip 3)

If Dip 3 = **ON,** the interface switches to the CVBS/AHD front camera input **V3-Front** after the reverse gear is engaged. In addition, manual switching to the front camera input is possible from any picture mode using an external keypad (short press).
In the OSD menu settings, the automatic display time of the front camera can be selected between 5; 10; 15 or 20 seconds or switched off. Another video source could then also be connected to instead of a front camera.

1.4.3 Rear-view camera settings (dip 4)

If dip 4 = **OFF**, the interface switches to the factory image for the existing factory rear-view camera or factory PDC display as long as reverse gear is engaged.
If Dip 4 = **ON**, the interface switches to its CVBS/AHD rear-view camera input **V4-Reverse** (provided Dip 5 is set to OFF) when reverse gear is engaged.

1.4.4 Connection type of the rear-view camera (Dip 5)

Dip 5 = **OFF** selects the **V4 -Reverse** input as the rear-view camera input.

1.4.5 Position of factory PDC display (Dip 7-8)

The position of the factory PDC display is using Dips 7 and 8. **The position of the PDC display is not adjusted; instead, the interface is told where to find the factory PDC graphic.** After activation, the PDC display is always located to the right of the picture from an aftermarket rear-view camera.

Position of PDC	Dip 7	Dip 8
Right	**OFF**	**OFF**
Centre	**OFF**	**ON**
Left	**ON**	**OFF**
No PDC	**ON**	**ON**

Power reset interface after each dip change to activate changes!

Note: Dip switch 6 has no function and must be set to OFF.

1.5 Settings – 4 dip switch bench right (head unit)

Interface box, top side right, black

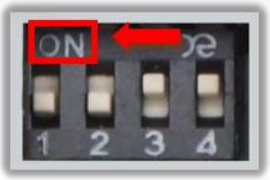

Attention: In contrast to the other switch benches (8 and 4 on the side), the dip position UP = ON and DOWN = OFF for the 4 on the top!

Attention! Flip the dip switches very carefully with micro tool.

Assignment of the 4pin HSD connection according to head unit	Dip 1	Dip 2	Dip 3	Dip 4
PCM 4.1	OFF ↓	OFF ↓	OFF ↓	ON ↑
PCM 5.0 und PCM 6.0	OFF ↓	OFF ↓	ON ↑	OFF ↓

Power reset interface after each dip change to activate changes!

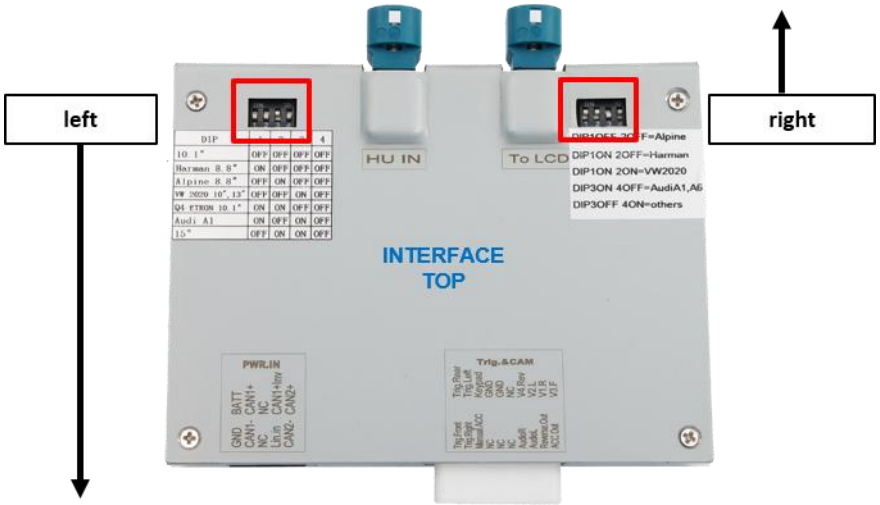

1.6 Settings – 4 dip switch bench left (head unit/monitor size)

Interface box, top side left, black

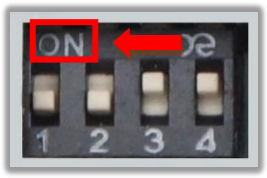

Attention: In contrast to the other switch banks (8 and 4) the dip position UP = ON and DOWN = OFF!

Attention! Dip switch especially careful with micro-tool to fold.

Head unit/monitor size	Dip 1	Dip 2	Dip 3	Dip 4
All head units	OFF ↓	OFF ↓	ON ↑	OFF ↓
Combination 1*	ON ↑	ON ↑	ON ↑	OFF ↓
Combination 2*	OFF ↓	OFF ↓	OFF ↓	ON ↑
Combination 3*	ON ↑	OFF ↓	OFF ↓	ON ↑

*** If the PDC display is being used, test the three combinations in turn and select the setting at which the PDC display is shown correctly in the right-hand part of the screen.**

Power reset interface after each dip change to activate changes!

1.7 Settings – 4 dip switch bench (CAN bus)

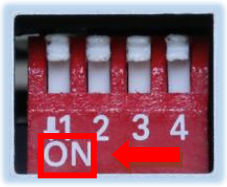

Interface box, right side, red

Set the DIP switch positions according to the following table.
Dip position UP = OFF and DOWN = ON

Dip	Function	ON (down)	OFF (up)
1	Selection of manufacturer-specific image signal type (only if Dip 2 = OFF)*	Video signal type A*	Video signal type B*
2	Automatic detection or manual setting of manufacturer-specific signal type*	Automatic detection*	Manual setting via Dip 1*
3	No function	-	Set to OFF
4	No function	-	Set to OFF

*** Default setting: DIP switch 2 = ON, DIP switches 1, 3 and 4 = OFF.**
If no picture is displayed on start-up, set DIP switch 2 to OFF and test DIP switch 1 by setting it to ON and then OFF in turn. Use the setting that displays the picture correctly.

Power reset interface after each dip change to activate changes!

2 Installation

Switch off the ignition and disconnect the vehicle battery according to the factory specifications!
If the vehicle battery must not be disconnected according to the factory specifications, in most cases it is sufficient to put the vehicle into sleep mode. If this does not work, disconnect the vehicle battery with a resistor cable.

Before final installation, we recommend a test run of the interface with all connected devices to ensure that all parts are compatible. Due to possible changes in the vehicle manufacturer's production at any time, incompatibility can never be ruled out.

As with every installation of retrofit devices, a quiescent current test of all retrofitted devices must be carried out after installation to ensure that the devices are switched off to standby mode in vehicle sleep mode.

2.1 Place of connection

The video interface is connected to the rear of the head unit.

2.2 Connection schema

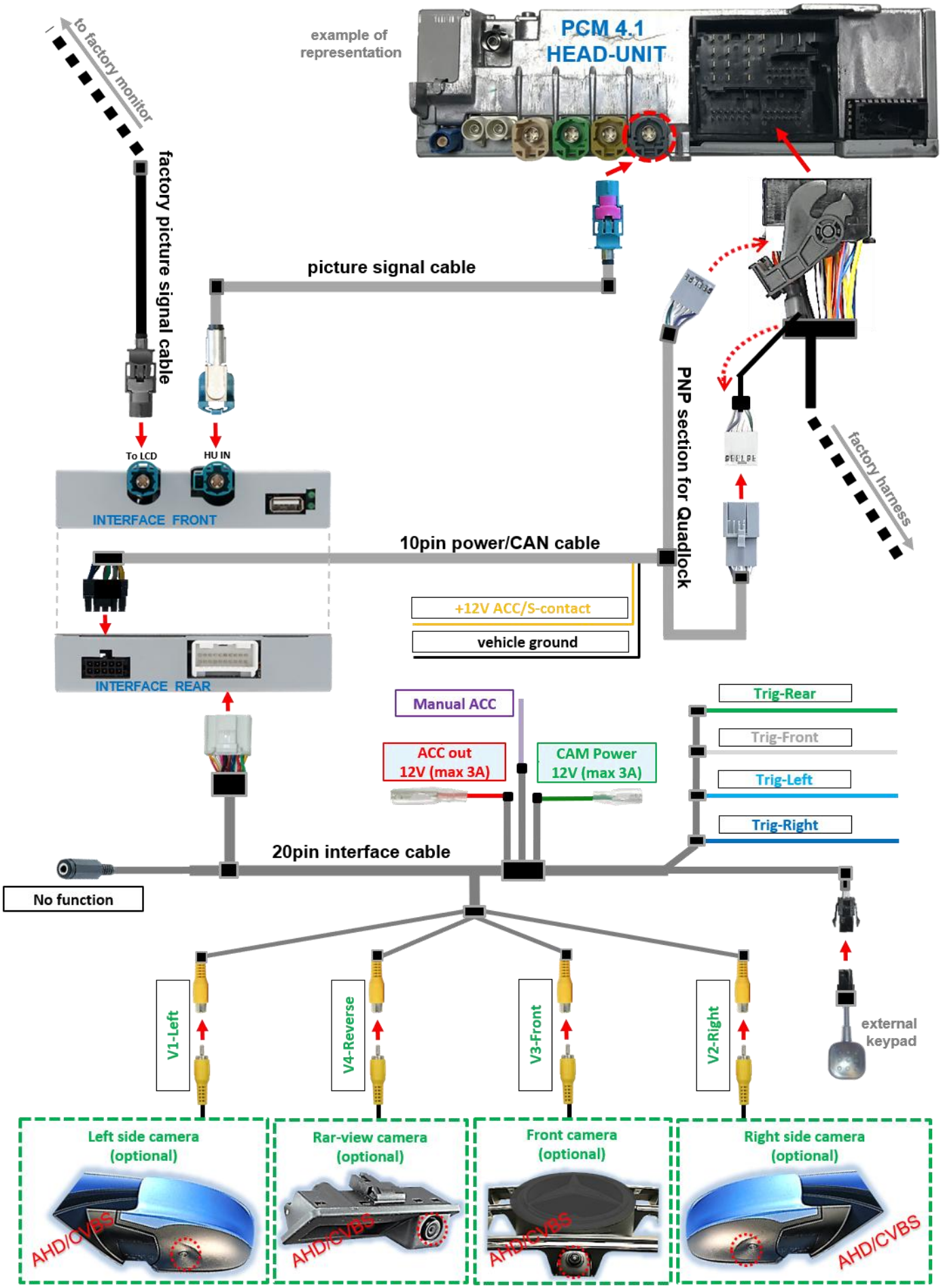

2.3 Connection - picture signal cable

Remove the head unit.

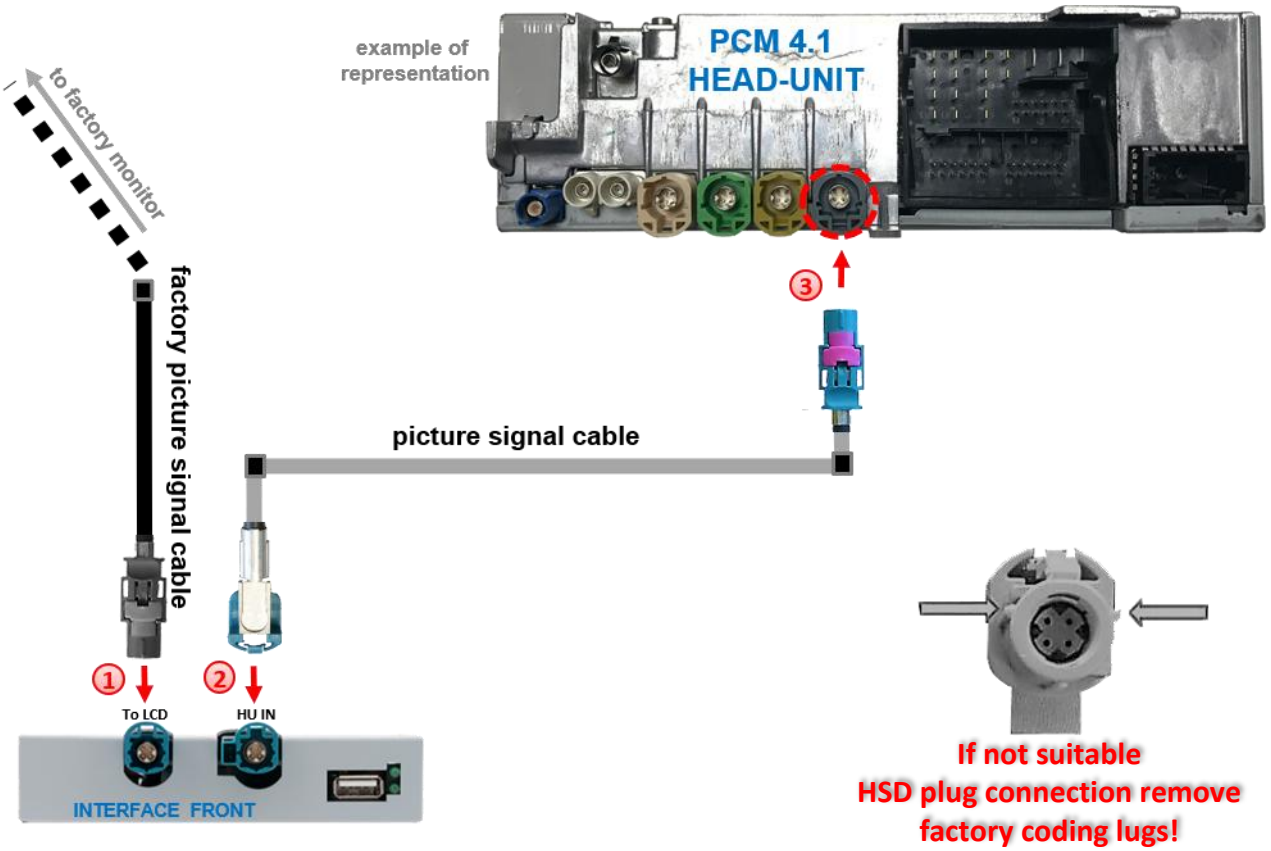

1. Disconnect the grey, **black**, pink or **burgundy** HSD female connector (colours may vary) of the factory picture signal cable on the back of the head unit and connect it to the water-blue HSD connector "**TO LCD**" of the interface.

   To identify the HSD female connector for the video signal on the head unit, disconnect the HSD female connectors one by one whilst the head unit is switched on. The correct female connector can be identified by the fact that the monitor screen goes black.

   Note: If necessary, the coding tabs on the 4pin HSD female connector of the factory picture signal cable, as marked in the diagram above, must be cut away!

2. Connect the water-blue angled HSD female connector of the picture signal cable to the water-blue HSD+2 male connector "**HU IN**" of the interface.

3. Connect the water blue non-angled HSD female connector of the picture signal cable to the grey, **black**, pink or **burgundy** HSD male connector (colours may vary) of the head unit.

Note: Depending on the installation conditions, the picture signal cable supplied may also be installed with the HSD connectors reversed. However, it may only be connected to the head unit!

2.4 Connection - cable sets, power supply and CAN bus or analogue without CAN bus

The interface can be integrated via CAN bus or operated completely analogue without connection to the CAN bus.
When integrated via CAN bus, the interface is switched on via the CAN bus and R-gear signal and turn signals are usually recognised from this. In some vehicles, dynamic guide lines can also be displayed using the CAN bus steering signals.

In exceptional cases, CAN communication is not (fully) compatible. If no interface LED lights up after connecting the 10-pin power/CAN cable set when the ignition is switched on, the analogue connection described below must be made. The analogue connection is also possible to avoid a possible subsequent CAN bus incompatibility. The interface must be both switched on and switched to its inputs via +12V switching inputs.

The display of dynamic guide lines for rear-view camera is omitted with analogue connection.

Regardless of whether the connection is made with CAN bus or analogue without CAN bus, the **black Ground wire** and the yellow +12V ACC/S contact wire of the 10-pin power/CAN cable must always be connected.

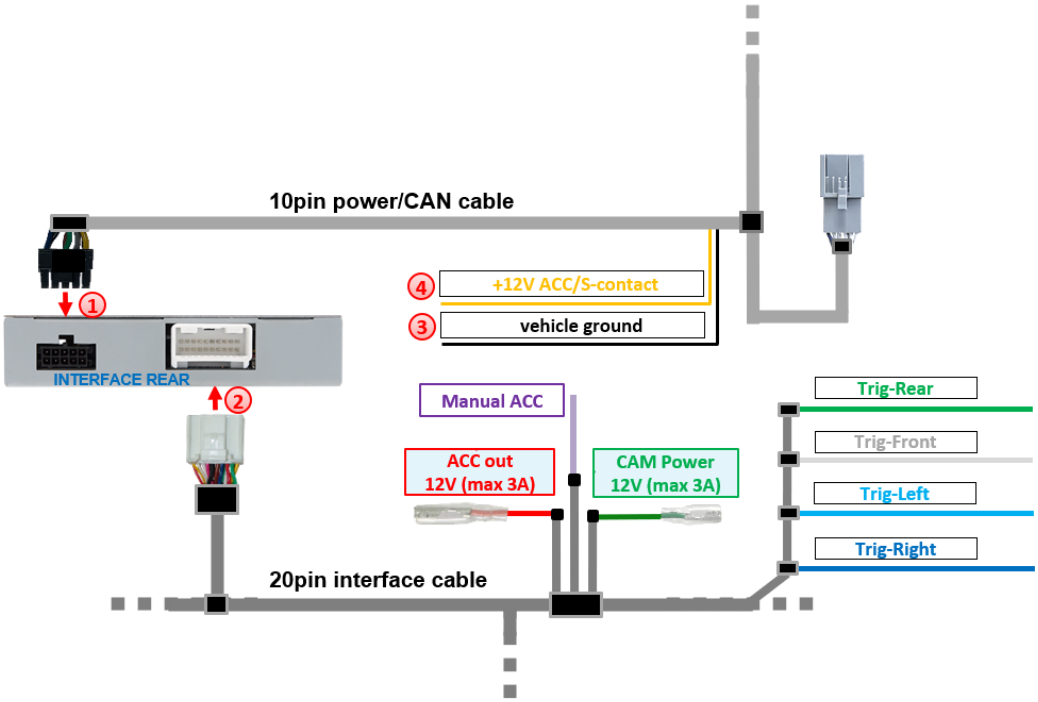

1. Connect the 10-pin female connector of the 10-pin power/CAN cable to the 10-pin male connector of the interface.
2. Connect the 20-pin female connector of the 20-pin interface cable to the 20-pin male connector of the interface.
3. **Connect the black ground wire** of the 10-pin power/CAN cable to vehicle ground.
4. **Connect the yellow +12V ACC/S-contact wire** of the 10-pin power/CAN cable to **+12V ACC (terminal 15r) or S-contact (terminal 86s)** of the vehicle.

Note: It is technically also possible to connect the interface to the +12V battery (terminal 30). However, in the event of a (partial) CAN bus incompatibility or a defect, it cannot be ruled out that the interface does not switch off in sleep mode. A connection to +12V battery (terminal 30) is at your own risk!

2.4.1 Connection with CAN bus

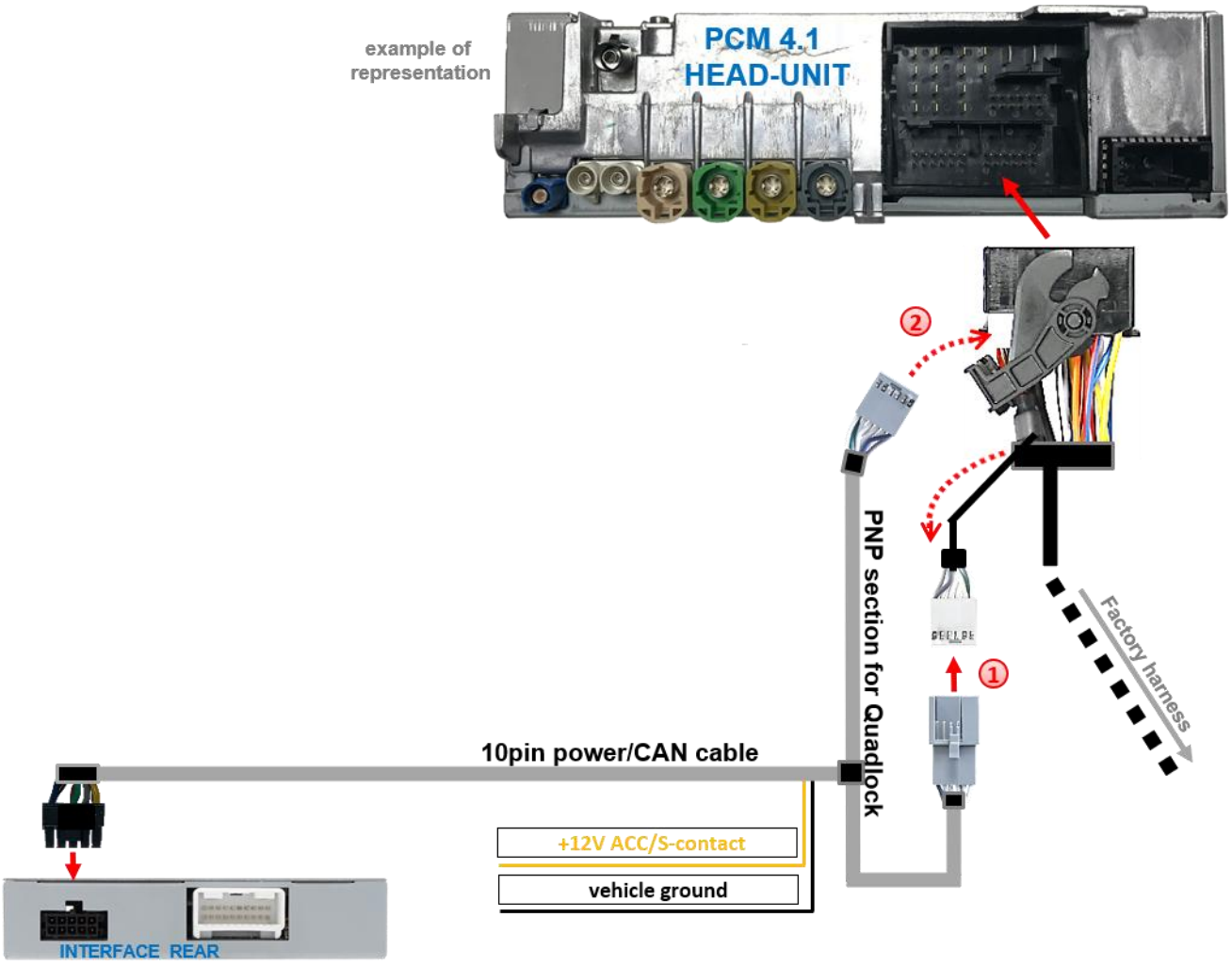

1. Disconnect the female Quadlock connector of the vehicle wiring harness at the rear of the head unit and connect the 12-pin female connector previously unclipped from it to the grey 12-pin male connector of the 10-pin power/CAN cable.
2. Clip the grey 12-pin female connector of the 10-pin power/CAN cable into the previously vacated position of the female Quadlock connector.

   Then reconnect the female Quadlock connector on the back of the head unit.

Attention!
In exceptional cases, CAN communication is not (fully) compatible. If no interface LED lights up after connecting the 10-pin power/CAN cable set when the ignition is switched on, the analogue connection described below must be made.

2.4.2 Analogue connection without CAN bus

With analogue connection, the four CAN wires of the 10-pin power/CAN cable are not connected - the four wires of the 10-pin power/CAN cable must be disconnected for this!

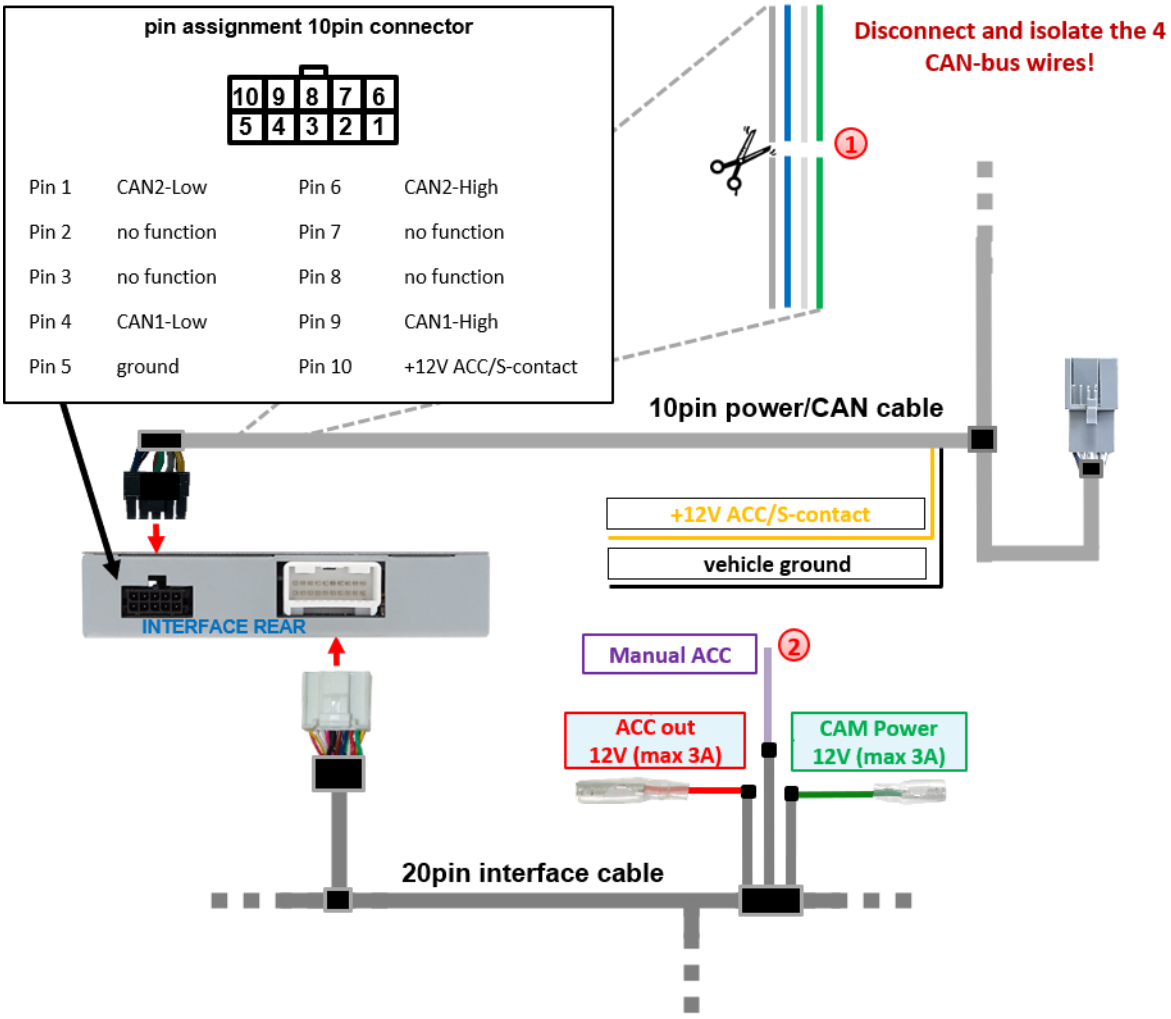

1 Disconnect and insulate the 4 CAN bus wires (**grey**, **blue**, white **and** **green**) of the 10-pin power/CAN cable approx. 4-5 cm behind the black male connector.

2 Connect the violet wire **Manual ACC** of the 20-pin interface cable to the **+12V S contact (terminal 86s) or ACC terminal 15r** (e.g. cigarette lighter, glove compartment lighting).

Notes

- The screen is only switched on as long as the video interface is switched on via +12V on **Manual ACC.** Otherwise, the factory picture is also black.
  When selecting the switch-on signal, it must be checked whether the factory picture is available in all desired operating states.
- The display of dynamic guide lines for rear-view camera is omitted with analogue connection.
- If the interface is connected analogue (without CAN bus), the rear-view camera and side cameras must also be connected analogue. See points:
  2.6.2 Case 2: Reverse gear signal from analogue signal
  2.8.2 Case 2: Turn signals from analogue signal

2.5 Power supply outputs

The two **red** and **green** power supply lines **ACC out 12V (max 3A)** and **CAM Power 12V (max 3A)** of the **20-pin interface cable** can be used either as ACC power supply for the **external video sources** connected to **V1-Left, V2-Right** or **V3-Front**, or as a power supply for the **after-market cameras** (e.g. side, front and rear-view cameras) connected to the **V1-Left**, **V2-Right**, **V3-Front**, or **V4-Reverse**.

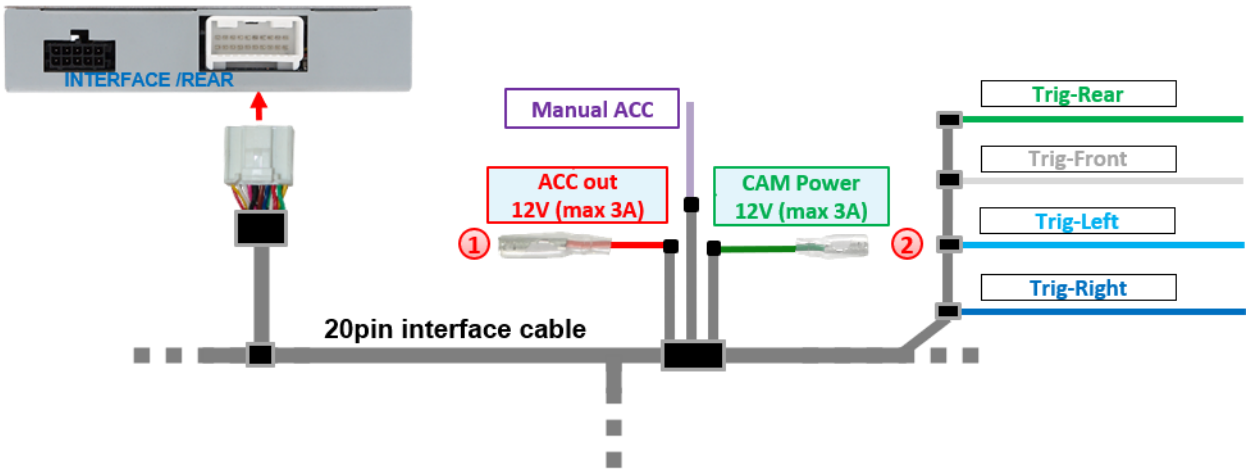

1 **External video sources** (no cameras) can be supplied with power via the red **ACC out 12V (max 3A)** power supply line of the **20-pin interface cable**.
The wire carries a **permanent** +12V ACC switching output current while the interface is switched on *(see the following chapter for connection diagrams)*.

2 The power supply for **after-market cameras** (e.g. rear-view, side and front cameras) can be provided via the green **CAM Power 12V (max 3A)** power supply line of the **20-pin interface cable.** The wire carries **+12V switching output current** only as long as one of the camera inputs is displayed, regardless of whether the connection is made via the vehicle CAN bus or via one of the trigger wires *(see the following chapter for connection diagrams)*.

2.5.1 Connection and power supply - Video sources
Rear-view camera, front camera and 2 side cameras

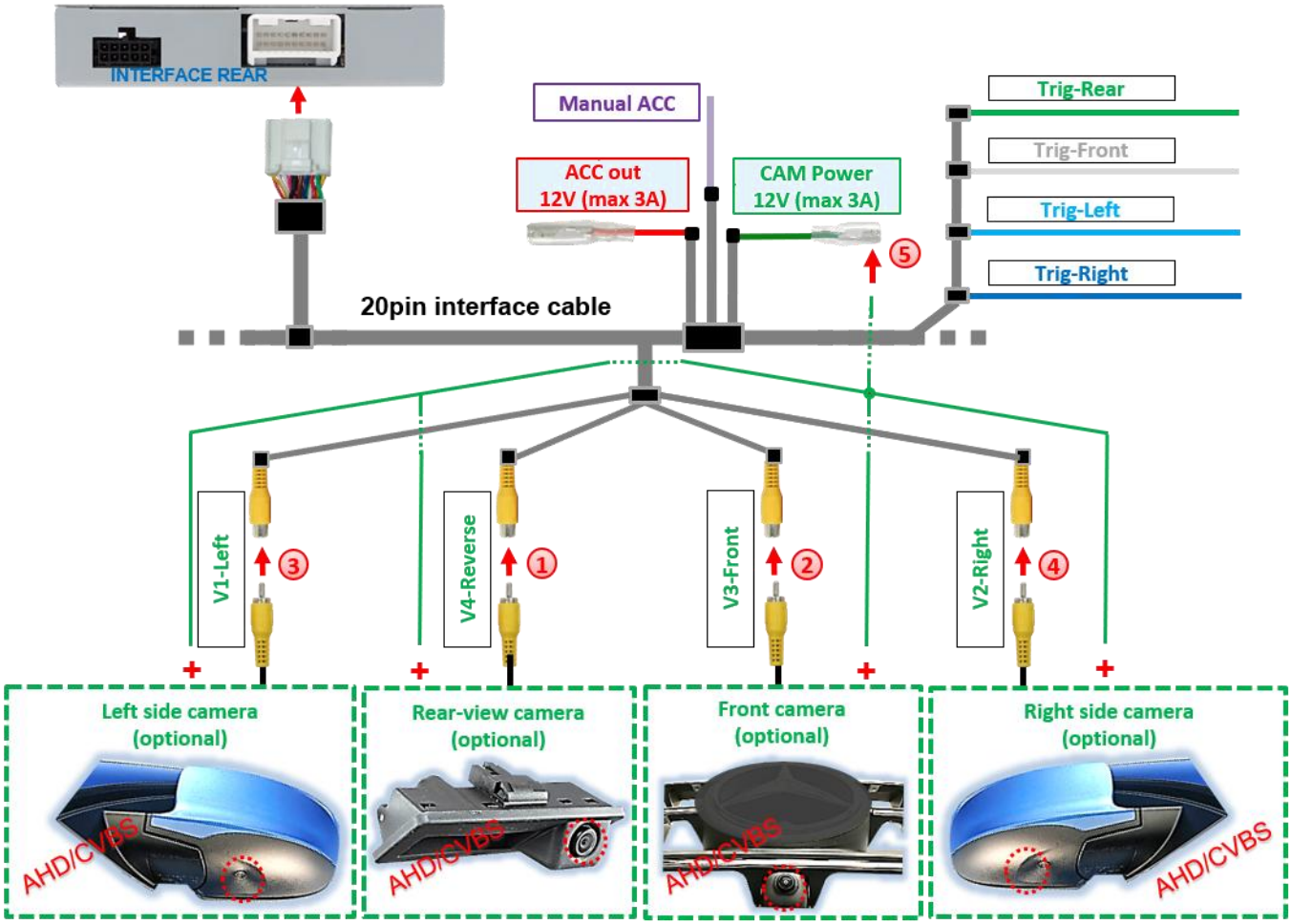

1. Connect the RCA male connector of the rear-view camera to the **V4 reverse** RCA female connector of the **20-pin interface cable.**
2. Connect the RCA male connector of the front camera to the RCA **V3 front** female connector of the **20-pin interface cable.**
3. Connect the RCA male connector of the left side camera to the RCA female connector **V1-Left** of the **20-pin interface cable.**
4. Connect the RCA male connector of the right side camera to the RCA **V2-Right** female connector of the **20-pin interface cable.**
5. Connect the power supply for all after-market cameras to the **green wire CAM Power 12V (max 3A)** of the **20-pin interface cable**.

Note: The type of camera selection (via vehicle CAN bus or trigger lines) can be preset **individually** for each input in the OSD menu settings.

Attention!
Video signal type of each video source must be preset in OSD-menu of corresponding video-input.

2.5.2 Connection and power supply - video sources
Rear-view camera, front camera and 2 video sources

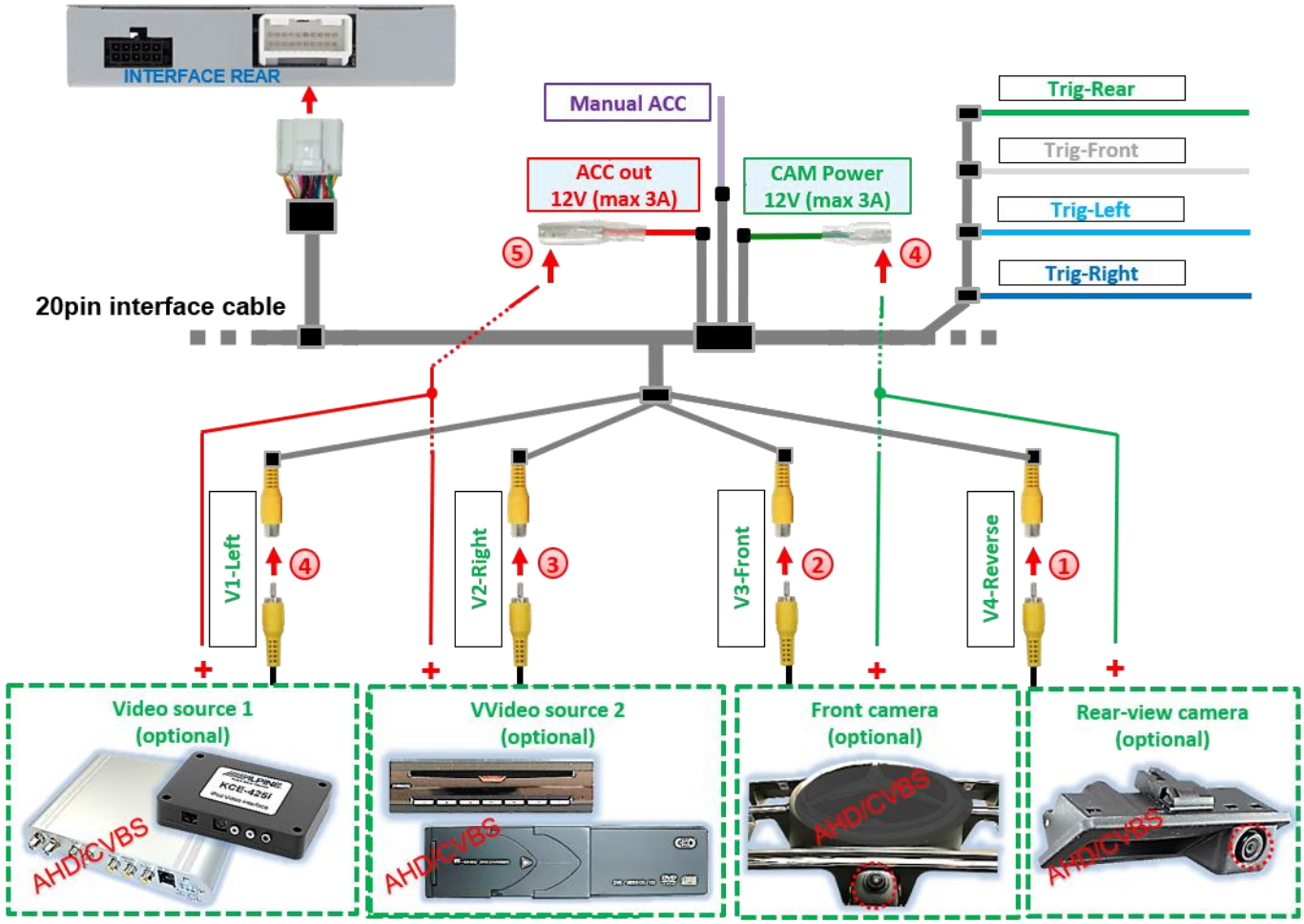

1. Connect the RCA connector of the rear-view camera to the RCA socket V4-Reverse of the 20-pin interface cable .
2. Connect the RCA male connector of the front camera to the RCA female connector V3-Front of the 20-pin interface cable.
3. Connect the male connectors of video sources 1 and 2 to the RCA connectors V1-Left and V2-Right of the
4. 20-pin interface cable.

   Connect the power supply for after-market cameras to the **green CAM Power 12V wire (max 3A)** of the 20-pin interface cable.
5. Connect the power supply for video sources to the **red wire ACC out 12V (max 3A)** of the 20pin interface cable.

Note: The type of camera selection (via vehicle CAN bus or trigger lines) can be preset **individually** for each input in the OSD menu settings.

Attention!
Video signal type of each video source must be preset in OSD-menu of corresponding video-input.

2.6 After-market rear-view camera

Automatic switching to rear-view camera can be carried out via the CAN bus or an analogue reverse gear signal.

2.6.1 Case 1: Reverse gear signal from CAN bus

The basic requirement is that the connection of the interface is made with CAN bus. Furthermore, the vehicle CAN bus reverse gear signal and detection by the interface must be compatible. Then the interface supplies +12V on the **green wire CAM Power 12V (max 3A)** of the **20pin interface cable** while reverse gear is engaged and the interface automatically switches to the rear-view camera input **V4-Reverse**.
See also chapter 1.4 Settings – 8 dip switch bench (interface functions*).*

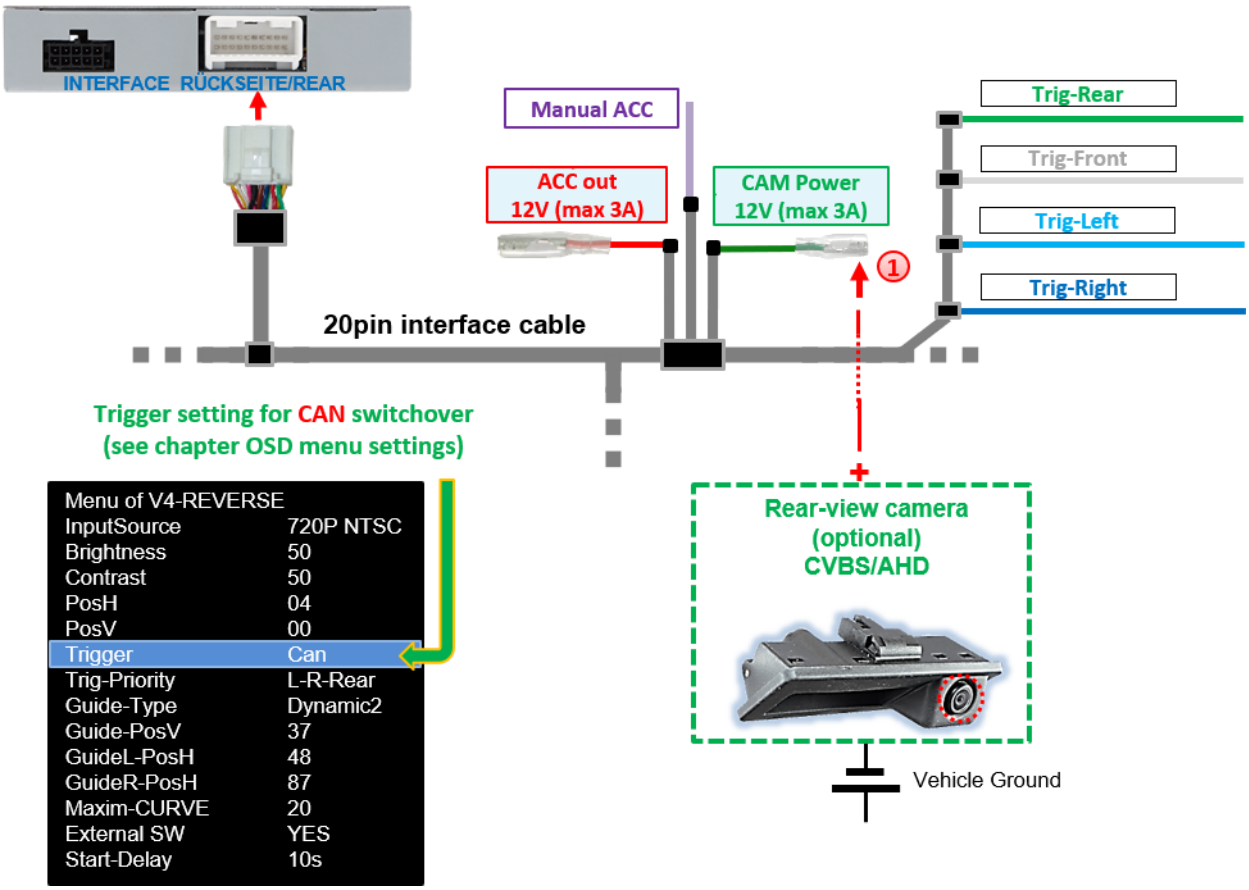

1 The +12V power supply for the after-market rear-view camera can be provided via the **green wire CAM Power 12V (max 3A)** of the **20-pin interface cable**, as this wire only carries current while the camera inputs are switched on (some cameras are not continuously current-stable).

Notes

- If the reverse gear detection of the interface on the CAN bus does not work, the reverse gear signal must be connected analogue.

2.6.2 Case 2: Reverse gear signal from analogue signal

When connected the interface without CAN bus or when connected with CAN bus, if reverse gear is engaged and the interface does not provide +12V on the **green wire CAM Power 12V (max 3A)** of the **20pin interface cable** (not all vehicles are compatible), an external reversing light switch signal is required. As the reversing signal contains electronic interference, a normally open relay (e.g. AC-MR-312 or AC-MR-201) or a noise filter (e.g. AC-PNF-RVC) is required. The following diagram shows the use of a normally open relay.

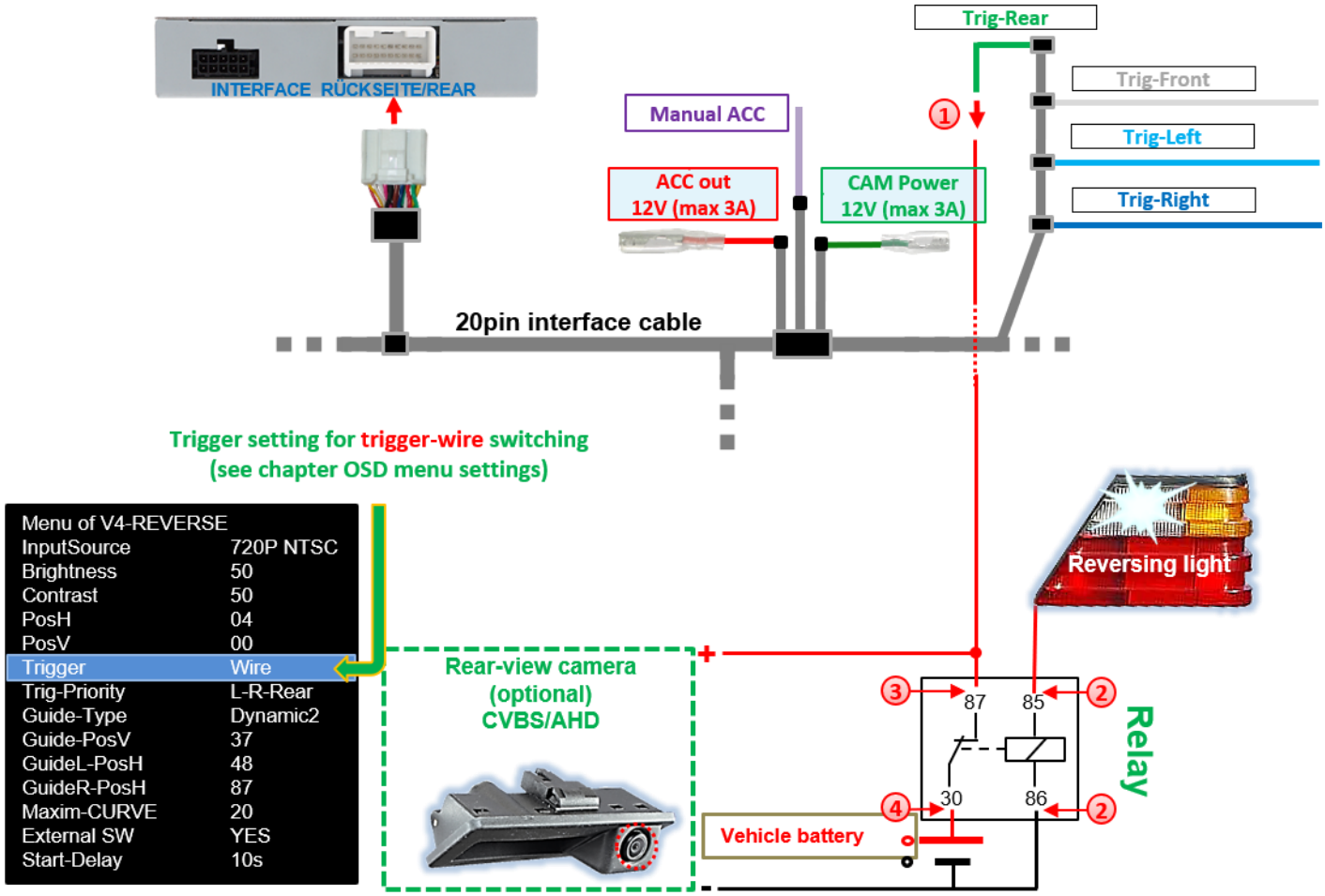

1. Connect the **green wire Trig-REAR** to the output terminal (87) of the relay.
2. Connect the reversing light power cable to the switching coil terminal (85) and the vehicle Ground to the switching coil terminal (86) of the relay.
3. Connect the rear-view camera power supply wire to the output terminal (87) of the relay, in addition to the **green Trig-REAR wire.**
4. Connect continuous current +12V to the input terminal (30) of the relay.

2.7 After-market front camera

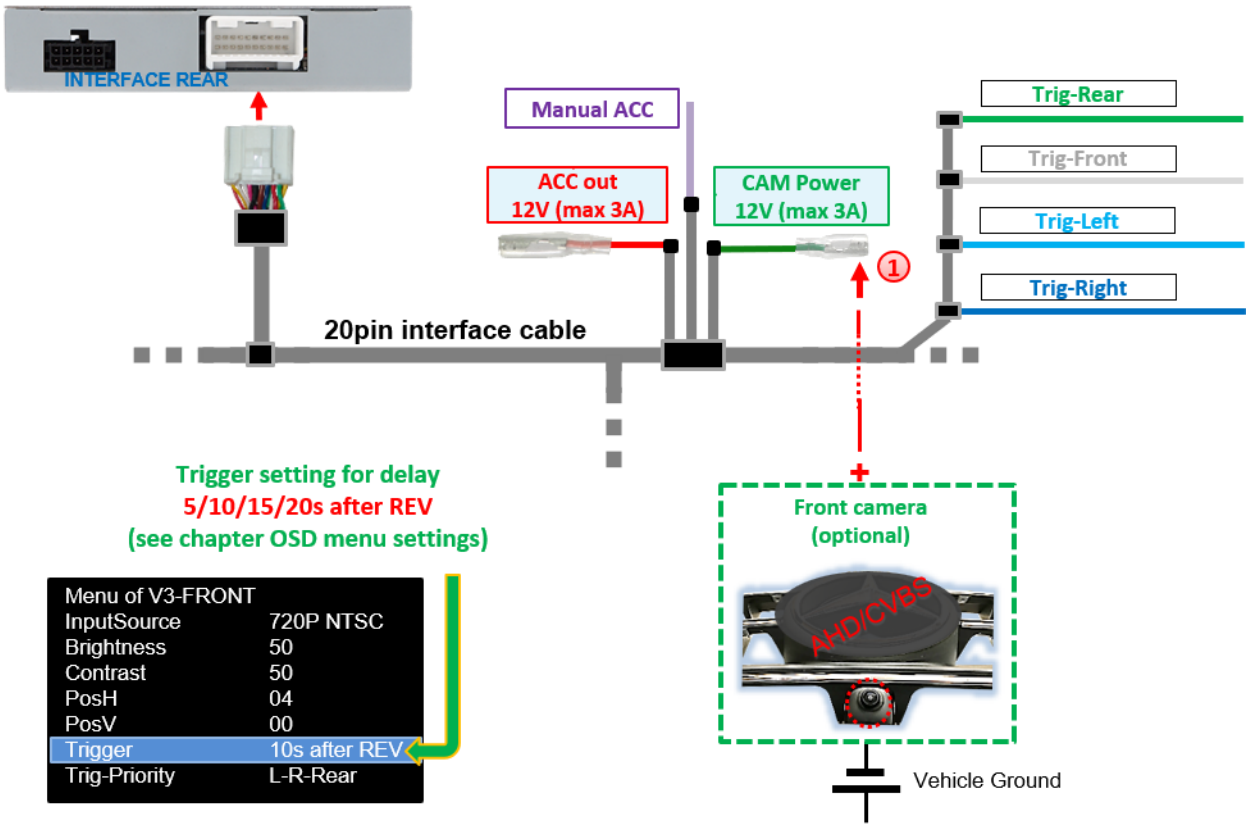

1 To power the front camera (and all other cameras connected to the video inputs), the **green CAM Power 12V (max 3A) wire** can be used. This is only current-carrying for the duration of any camera activation (some cameras are not continuously current-stable). Requirements are that dip 3 = **ON** (black 8 switch bench). The **green wire** then carries +12V (max. 3A) as power supply for the front camera as long as the front camera input is displayed.
The delay time can be individually selected for **5**, **10**, **15** or **20** seconds in the OSD menu settings of the front camera.

Switchover to front camera after reverse gear has been engaged for the time set in the OSD menu takes place with reverse gear signal from CAN bus and with analogue connection.

Note: In addition, manual switching to front camera input (short press) is possible from any picture mode using an external keypad (see chapter *3 Operating the video interface*).

2.8 After-market side cameras

Side cameras can be connected with selection via CAN bus or analogue signals.

2.8.1 Case 1: Turn signals from CAN bus

The basic requirement is that the connection of the interface is made with CAN bus. Furthermore, vehicle CAN bus turn signals and their recognition by the interface must be compatible. Then +12V is present on the **green wire CAM Power 12V (max 3A)** of the **20-pin interface cable for the** duration of turn signal operations.

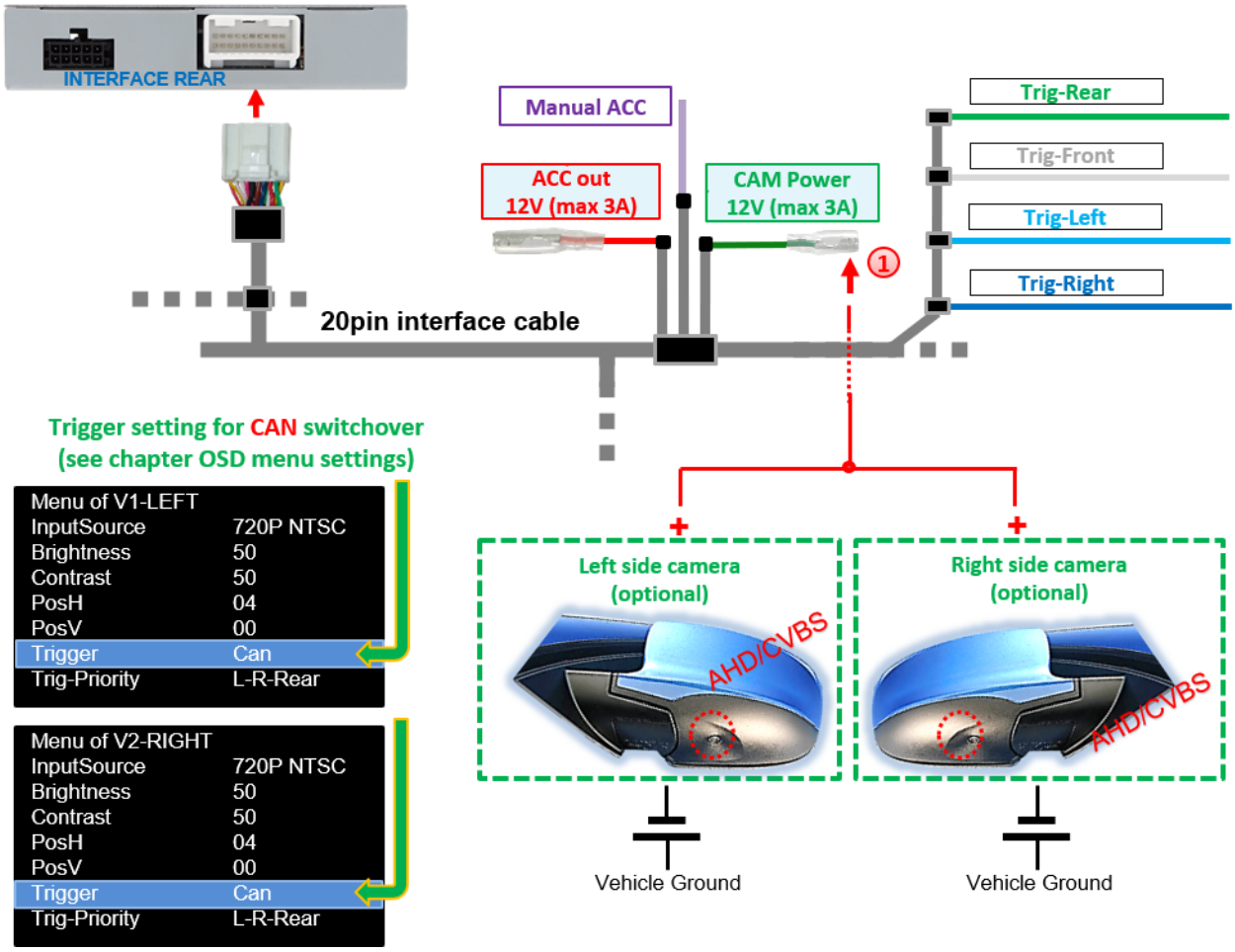

1 The power supply for the side cameras can be provided via the **green CAM Power 12V (max 3A) wire** of the **20-pin interface cable**, as this wire only carries current during camera activations (some cameras are not continuously current-stable).

Note: If the turn signal detection of the interface on the vehicle CAN bus does not work, the turn signals must be connected analogue.

2.8.2 Case 2: Turn signals from analogue signal

When the interface is connected without CAN bus or when the interface is connected with CAN bus and the turn signals from the vehicle CAN bus are not recognised, an analogue activation of the side camera inputs is possible via the +12V switching input wires **Trig-Left** and **Trig-Right.** An external switching signal from the turn signal bulbs is required to switch to the side camera inputs. As turn signals may contain electronic interference, a normally open relay (e.g. AC-RW-1230 with AC-RS5 wiring) or a noise filter (e.g. AC-PNF-RVC) is required for each input. The diagram below shows the use of a normally open relay.

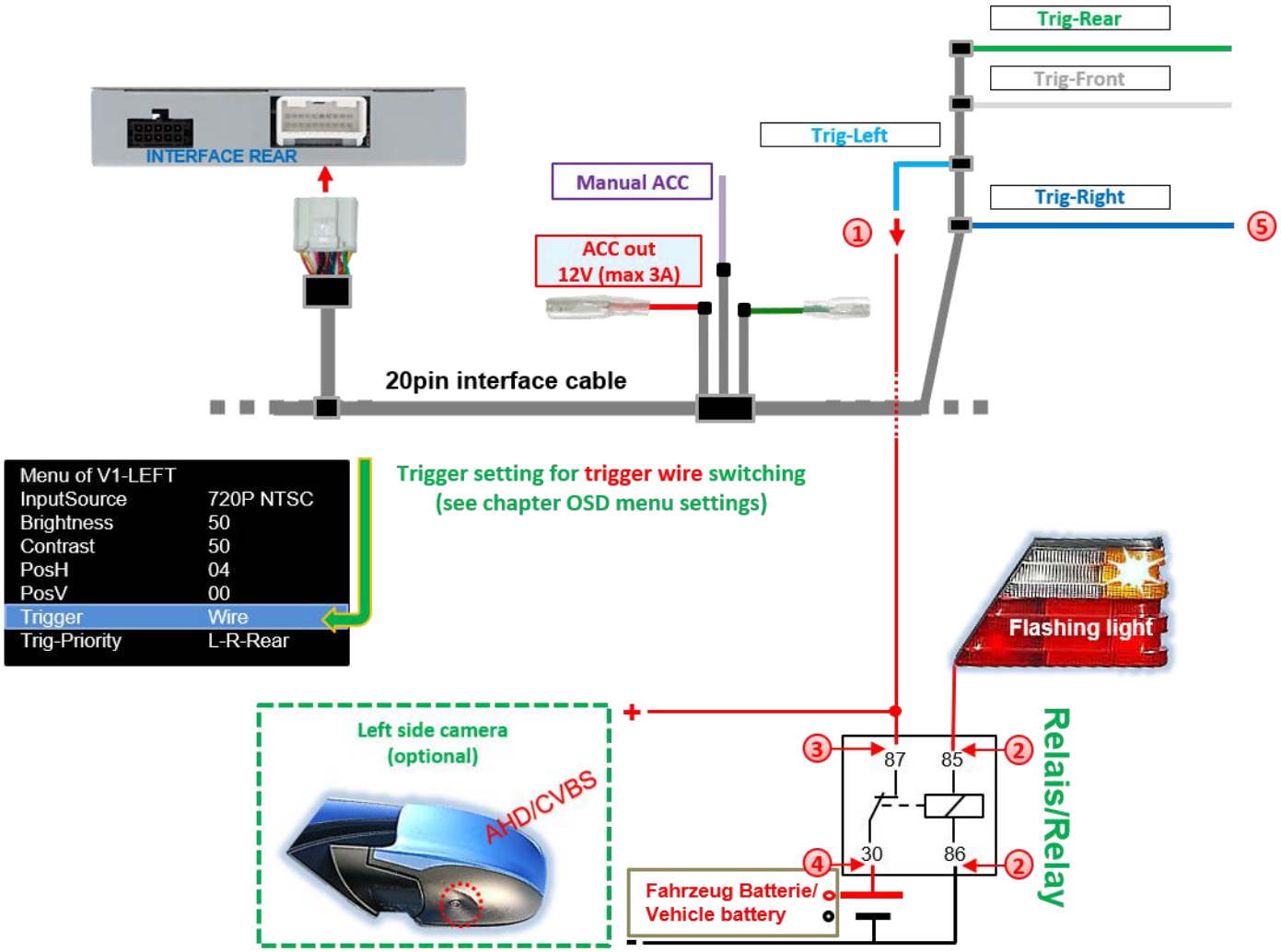

1. Connect the **light blue wire Trig-Left** to the output terminal (87) of the relay.
2. Connect the flashing light power cable of the left-hand flashing light to the switching coil terminal (85) of the relay and the vehicle ground to the switching coil terminal (86) of the relay.
3. Connect the left side camera power cable to the output terminal (87) of the relay, in addition to the **light blue Trig-Left wire**.
4. Connect continuous current +12V to input terminal (30) of the relay.
5. The same connection method applies to the right side camera via the **dark blue Trig-Right wire**.

2.9 Audio insertion

The interface can only insert video signals into the factory infotainment system. For all connected AV sources, their audio output must be connected to the factory AUX input (where available) or to an optional audio feed-in device (e.g. an FM modulator).

If several AV sources are connected to the infotainment system, an additional audio switch may be required. Inputted video signals can be activated in parallel with any audio mode of the factory-fitted infotainment system.

2.10 Connection - video interface and external keypad

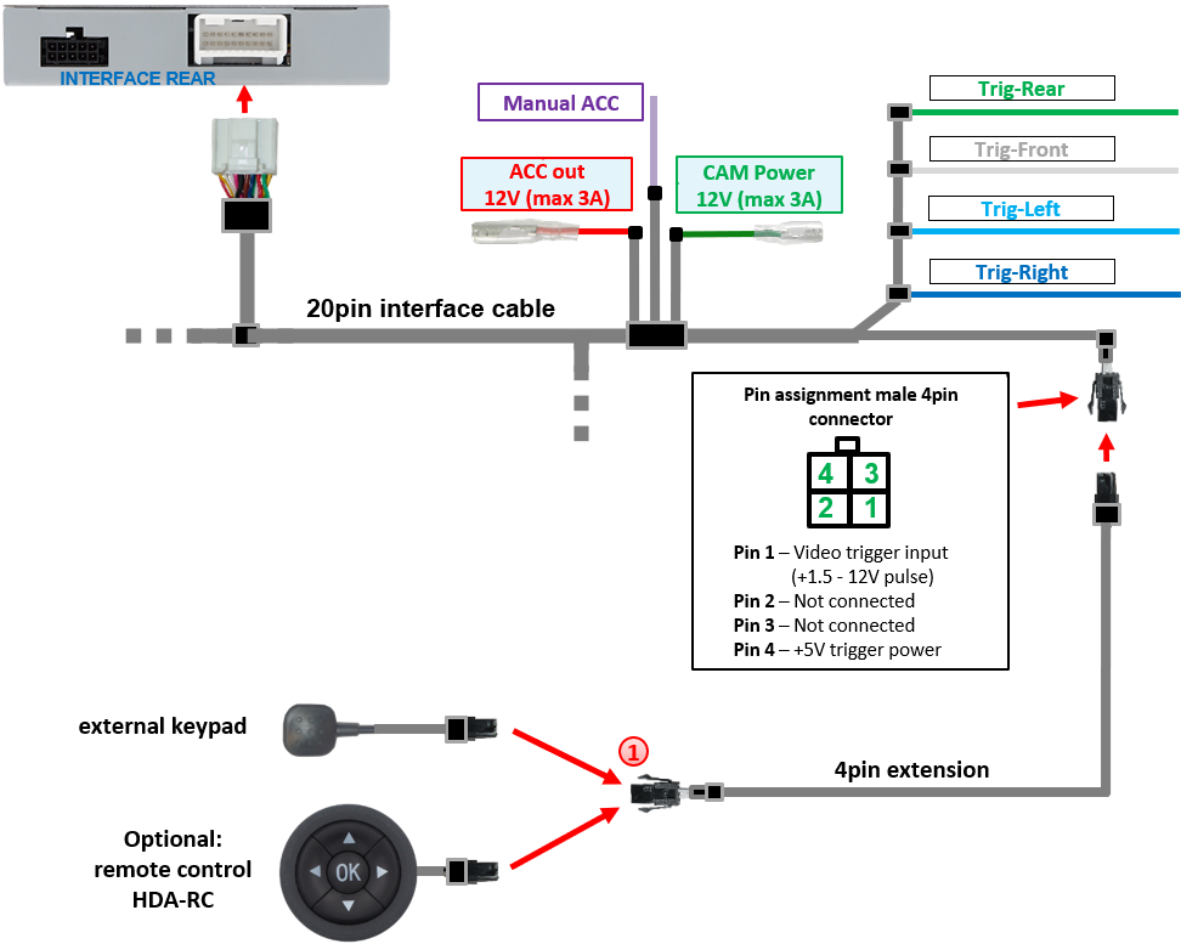

1 Connect the 4-pin female connector of the external keypad to the 4-pin male connector of the 20-pin interface cable.

Note: The keypad cable is supplied with an extended 4pin connector. **We strongly recommend that you install this connector in an accessible location, leave the supplied keypad connected to it, and document the installation location for future reference – even if the keypad is not required for switching between multiple sources.**

This may be particularly important for support purposes or if settings are to be adjusted in the interface's OSD menu after installation, e.g. using the optionally available "HDA-RC" remote control. If the 4pin connector is installed in an accessible location, the interface itself no longer needs to be accessed for subsequent setting changes.

The keypad should not be fitted in a 'pressed' position, but should remain loose and accessible at the connection point.

If there are issues with the factory image and/or the inserted image, or if any other malfunctions occur, press the external button for 10 seconds to reset the interface.

Optional: Instead of the external keypad, the interface can also be operated using the optionally available remote control „HDA-RC".* This enables direct selection of the video/camera inputs and more convenient changing of settings in the respective OSD menus.



Remote control 'HDA-RC' optionally available

* The remote control is compatible with all HDA and HDV interfaces that are labelled with 'RC' at the end of the software version.

2.11 OSD menu settings

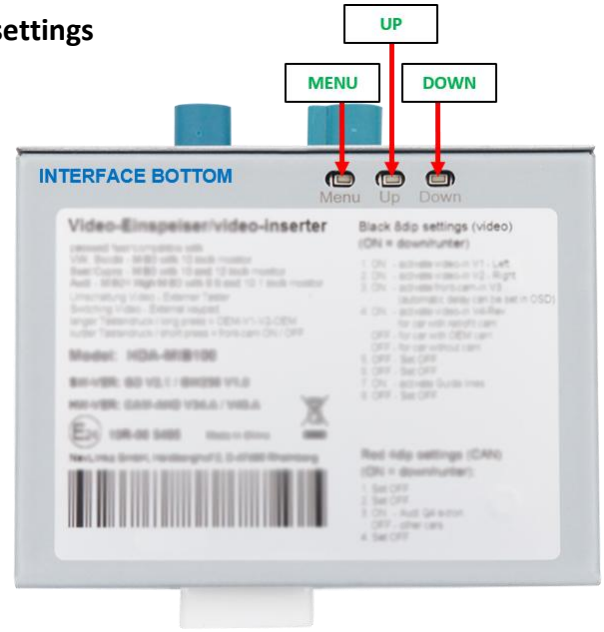

Attention!
Video signal type of each video source must be preset in OSD-menu of corresponding video-input.

OSD menu settings can be changed using the 3 keypads on the back of the interface. MENU opens the OSD settings menu or moves the cursor to the next menu item. UP (UP) and DOWN (DOWN) change the values of the current menu item.

The individual OSD settings menu of each video input can only be called up while it is displayed, regardless of whether a video source is connected.

The following setting options are available in the OSD setting menus of the 5 video inputs:

Menu V1-Left (V2-Right)

Switch bench of 8 dip switches dip 1 (dip 2) = ON

Menu of V1-LEFT	
InputSource	720P NTSC
Brightness	50
Contrast	50
PosH	04
PosV	00
Trigger	Can
Trig-Priority	L-R-Rear

Menu of V2-RIGHT	
InputSource	720P NTSC
Brightness	50
Contrast	50
PosH	04
PosV	00
Trigger	Can
Trig-Priority	L-R-Rear

Input Source Video-signal type for video-source(s) connected to **V1-Left (V2-Right)**.
This setting **must** be preset for correct video playback.
The following video-source signal types can be selected:
CVBS video-sources: **NTSC, PAL**
AHD video-sources: **720p NTSC, 960p NTSC, 1080p NTSC, 720p PAL, 960p PAL, 1080p PAL**

Brightness Brightness

Contrast Contrast

Pos H Horizontal image position

Pos V Vertical image position

Trigger Type of selection of video input **V1-Left (V2-Right)**
"CAN" function for side cameras via CAN bus. Selection of the video input **V1-Left (V2-Right)** when activating the blink signal left (right). The prerequisite is that the blink signal is recognised by the interface on the vehicle CAN bus. Manual selection of this input using an external keypad does not work with this setting.
"Wire" function for other video sources or side cameras without CAN bus. The video input **V1-Left (V2-Right)** is selected exclusively via the **light blue** (**dark blue**) **Trig-Left** (**Trig-Right**) wire or manually via an external keypad.

Trig-Priority Switching priority when switching signals are present for multiple inputs simultaneously (CAN bus or analogue +12 V triggers). The signal with the highest priority is displayed:
L-R-Rear: ***V1-Left*** → ***V2-Right*** → ***V4-Reverse***
Rear-R-L: ***V4-Reverse*** → ***V2-Right*** → ***V1-Left***

Menu V3 front **Switch bench of 8 dip switches** Dip 3 = ON

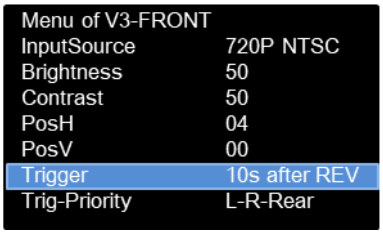

Input Source Video-signal type for video-source(s) connected to **V3-Front**.
This setting **must** be preset for correct video playback.
The following video-source signal types can be selected:
CVBS video-sources: **NTSC, PAL**
AHD video-sources: **720p NTSC, 960p NTSC, 1080p NTSC, 720p PAL, 960p PAL, 1080p PAL**

Brightness Brightness

Contrast Contrast

Pos H Horizontal image position

Pos V Vertical image position

Trigger Type of selection of video input **V3 front**.
"Delay" function for front camera. The "**Delay"** setting is used to determine the automatic switching of a front camera connected to the V3 **front input** after reverse gear is engaged and its display duration on the display. Available are 5s after REV, 10s after REV, 15s after REV, 20s after REV.
"Wire" function for other video sources. If another video source is to be connected to **V3-Front** instead of a front camera, select the "Wire" setting. This switches off the "**Delay"** function and the input can only be selected via the white Trig-Front wire or manually via an external keypad.

Trig-Priority Switching priority when switching signals are present for multiple inputs simultaneously (CAN bus or analogue +12 V triggers). The signal with the highest priority is displayed:
L-R-Rear: ***V1-Left*** → ***V2-Right*** → ***V4-Reverse***
Rear-R-L: ***V4-Reverse*** → ***V2-Right*** → ***V1-Left***

Menu V4 reverse

Switch bench of 8 dip switches Dip 4 = ON, Dip 5 = OFF, Dip 6 = OFF

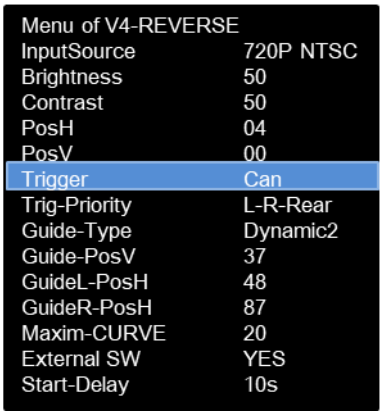

Input Source Video-signal type for video-source(s) connected to **V4-Reverse**.This setting **must** be preset for correct video playback.
The following video-source signal types can be selected:
CVBS video-sources: **NTSC, PAL**
AHD video-sources: **720p NTSC, 960p NTSC, 1080p NTSC, 720p PAL, 960p PAL, 1080p PAL**

Brightness Brightness

Contrast Contrast

Item H Horizontal image position

Item V Vertical image position

Trigger Type of selection of rear-view camera input **V4 reverse**.
"CAN" function with CAN bus connection. With the "**CAN**" setting, the system automatically switches to **V4 reverse** for CVBS/AHD rear-view camera when reverse gear is engaged. The interface must recognise the reverse gear in the CAN bus.
"Wire" function with analogue connection. The selection of a rear-view camera connected to the **V4 reverse** via the **green Trig-Rear wire** is possible with both the "**Wire**" and **"CAN"** settings. It is recommended to set **"Wire"** for analogue (reversing signal) connection.

8-position switch bench Dip 4 = ON, Dip 5 = OFF, Dip 6 = OFF

Trig-Priority Switching priority when switching signals are present for multiple inputs simultaneously (CAN bus or analogue +12 V triggers). The signal with the highest priority is displayed:
L-R-Rear: ***V1-Left*** → ***V2-Right*** → ***V4-Reverse***
Rear-R-L: ***V4-Reverse*** → ***V2-Right*** → ***V1-Left***

Guide Type Setting 6 different angles of the guide lines for the rear-view camera

Moving guide lines	**Dynamic 1-6**
Fixed guide lines	**Fixed 1-6**
No guide lines	**OFF**

Guide Pos. V	Vertical position of the auxiliary wires	**35-69**
Guide L Pos.H	Horizontal position of the left auxiliary wire	**00-90**
Guide R Pos.H	Horizontal position of the right-hand auxiliary wire	**00-121**
Maxim. Curve	Radius of the auxiliary wires	**01-20**

External SW Selectable via external keypad **V4 Reverse**
YES: *Factory video* → ***V1-Left*** → ***V2-Right*** → ***V4-Reverse*** → *Factory video*
NO: *Factory video* → ***V1-Left*** → ***V2-Right*** → *Factory video*

Start-Delay Switch delay of the interface at start-up. This function is technically necessary in some vehicles, as otherwise the factory system may malfunction (e.g. black screen, touch problems). The following options are available (in seconds):
5s/6s/7s/8s/9s/10s/12s/15s/20s
Changing the default settings may cause malfunctions!

3 Operating the video interface

3.1 Via factory touch display

The top left touch display corner can be used to switch all activated inputs.



A long press (3 seconds) in the top left corner of the touch display switches from factory video to the first activated interface video input. Each further long press switches to the next activated interface video input until the last one switches back to factory video. Deactivated inputs are skipped. If all inputs are activated using the corresponding dip switch, the sequence is as follows:

Factory picture → ***V1-Left*** → ***V2-Right*** → ***V4-Reverse**** → *Factory picture*

****V4-Reverse*** can only be selected via the external keypad if the "External SW" function is set to "Yes" in the **V4-Reverse** menu.

Switching via the top left touch display corner does not work in all vehicles. In some vehicles, the external keypad must be used.

3.2 Via external keypad

The external keypad can be used to switch all activated inputs and to reset the Interface.

- Long press of the keypad (2-3 seconds)

The external keypad switches from factory video to the first activated interface video input with a long press (2-3 seconds). Each further long press switches an activated interface video input until the last press switches back to factory video. Deactivated inputs are skipped. If all inputs are activated using the corresponding dip switch, the sequence is as follows:

*Factory picture → **V1-Left** → **V2-Right** → **V4-Reverse**** → *Factory picture*

***V4-Reverse** can only be selected via the external keypad if the "External SW" function is set to "Yes" in the **V4-Reverse** menu.

- Short press of the keypad (only if dip 3 is set to ON)

Short press of external keypad, switches from any video mode to front camera input **V3-Front** and next short press switches back to the previous video mode.

Note: We recommend to install the external keypad for possible support reasons even if not required for customer needs. Make sure the external keypad is not installed “pressed” then.

- Press and hold the keypad for 10 seconds

If the camera picture and/or the inserted video or other functions are not working properly, press the external keypad for 10 seconds to reset the interface.

3.3 Optional: Operating the video interface via the ‘HDA-RC’ remote control

Instead of the external keypad, the interface can also be operated using the optionally available ‘HDA-RC’ remote control.* This allows direct selection of the video/camera inputs and more convenient changing of settings in the respective OSD menus.



Remote control ‘HDA-RC’ optionally available

* The remote control is compatible with all HDA and HDV interfaces that are labelled with ‘RC’ at the end of the software version.

4 Specifications

BATT/ACC range	9V - 16V
Stand-by power drain	about 5mA
Power consumption	350mA @12V
Video input	0.7V - 1V
Video input signal types	CVBS/AHD
Signal standards CVBS/AHD	NTSC/PAL, 720p NTSC (30Hz), 720p PAL (25Hz), 960p NTSC (30Hz), 960p PAL (25Hz), 1080p NTSC (30Hz), 1080p PAL (25Hz)
Temperature range	-40°C to +85°C
Video box dimensions	117 x 25 x 109 mm (W x H x D)

5 FAQ - Troubleshooting Interface functions - product-specific

Problem	Possible cause	Solution
Vehicle battery discharges	Power connection made to battery terminal 30	See chapter *2.4 Connection - cable sets, power supply and CAN bus or analogue without CAN bus* - Connection of the 10-pin power / CAN cable
Malfunction or no picture	Video-signal type of video-source not defined in OSD-menu of the corresponding video input	See chapter *2.11 OSD menu settings* - Menu of the respective input

6 FAQ - Troubleshooting Interface functions - general

For any troubles which may occur, check the following table for a solution before requesting support from your vendor.

Symptom	Possible reason	Possible solution
No picture/black picture (factory picture).	Not all connectors have been reconnected to factory head-unit or monitor after installation.	Connect missing connectors.
	CAN-bus wires connected to CAN-bus in wrong place.	Refer to the manual where to connect to the CAN-bus. If not mentioned, try another place to connect to the CAN-bus.
	No power on video-interface (all LED video-interface are off).	Check power connection of interface.
No picture/black picture/white picture (inserted picture) but factory picture is OK.	No picture from video source.	Check on other monitor whether video source is OK.
	No video-source connected to the selected interface input.	Check settings dips 1 to 5 of 8dip bench of video interface which inputs are enabled and switch to corresponding input(s).
	Setting of video signal type of active video input is not equal to video signal type of connected video-source.	Set the video signal type of the video source correctly in the OSD menu of the corresponding input.
	LVDS cables plugged in wrong place.	Double-check whether order of LVDS cables is exactly connected according to manual. Plugging into head-unit does not work when the manual says to plug into monitor and vice versa.
Inserted picture totally wrong size or position.	Wrong settings of video-interface.	Verify the vehicle-specific dip switch position in the instructions. If necessary, test different positions of the vehicle-specific dip switches. Perform a power reset after each change (briefly remove the black 10-pin micro-fit power socket once).
Inserted picture double or multiple times on monitor.		
Inserted picture distorted, flickering or running vertically.	Video sources output set to AUTO or MULTI which causes a conflict with the interfaces auto detection.	(Only concerns video-sources with selectable output – e.g., DVD-Players, TV-Tuners, etc.) Set video source output fixed to PAL or NTSC. It is best to set all video sources to the same video signal type output.
	If error occurs only after source switching: Connected sources are not set to same video signal type output.	Set all video sources to the same video signal type output.
Inserted picture b/w.	Setting of video signal type of active video input is not equal to video signal type of connected video-source.	Set the video signal type of the video source correctly in the OSD menu of the corresponding input.

Symptom	Possible reason	Possible solution
Only on first inserted video activation after IGN on, the inserted picture is distorted.	Menu item *Trigger* of the corresponding video-input is set to *CAN-bus* though analogue signal triggering is used.	Open OSD-menu of corresponding video input and set the menu item *Trigger* to *Wire.*
Inserted picture qual. bad.	Picture settings have not been adjusted.	Use the 3 switches on interface-box or optional HDA-RC cable remote control to set the desired picture settings for the respective video source in the OSD menu of the interface.
Inserted picture size slightly wrong.		
Inserted picture position wrong.		
Camera input picture flickers.	Camera is being tested under fluorescent light (neon).	Test camera under natural light outside the garage.
Camera input picture is bluish.	Protection sticker not removed from camera lens.	Remove protection sticker from lens.
Camera input picture black.	Camera power taken directly from reverse gear lamp.	Use relay or electronic filter to "clean" reverse gear lamp power. Alternatively, camera power can be taken from green wire CAM Power.
Camera input picture has distortion.		
Switching to inserted video does not work after IGN on or vehicle startup- temporary.	Interface has a start-up delay during which, after interface start-up for certain time, there is no switching to inserted video. Required to prevent the factory system from crashing.	In OSD menu of V4, default delay can be shortened time in menu item *StartDelay*, this might especially make sense on installations without connection to CAN-bus. Note: Too short *StartDelay* setting can cause (sporadically) black-screen of factory picture or loss of factory touch-screen control.
Not possible to switch video sources by OEM button.	Function not supported in this vehicle.	Use external keypad for AV-switching.
Not possible to switch video sources by external keypad.	Pressed too short.	For video source switching a longer press of about 2.5 seconds is required.
Interface does not switch to reverse camera input when reverse gear is engaged or does not switch to side camera input(s) when turn signal in on.	Video-input is not enabled.	Enable corresponding inputs (dips 1 to 5 of 8dip bench).
	CAN-bus of vehicle not fully compatible with interface. Function not supported.	Follow the manual for R-gear signal or turn signal from analogue signal.
	Menu item *trigger* in the OSD of the video-input was set to *Wire.*	Switch on corresponding input by external button or 12V to corresponding trigger input. Open OSD-menu of corresponding video input and set the menu item *Trigger* to *CAN bus.*
OSD-menu of interface cannot be accessed/opened.	No inserted video input of interface is active, factory picture is displayed.	Each video input of interface has its own OSD with its own settings. The OSD for each input can only be opened when the input is displayed.

7 Technical Support

Please note that direct technical support is only available for products purchased directly from NavLinkz GmbH. For products bought from other sources, contact your vendor for technical support.

For any support requests make sure to at least prepare:

- Product code and serial number of all involved products
- Vehicle data such brand, model, year of production, VIN, infotainment model

NavLinkz GmbH
Distribution*/Tech dealer-support*
Heidberghof 2
D-47495 Rheinberg

Tel +49 2843 17595 00

Email mail@navlinkz.de

E24 10R-06 5485



Made in China