MXN80C-AHD

HEATED, AUTO SHUTTER, AHD COLOR CAMERA

MXN®

Instruction Manual

◈ Contents

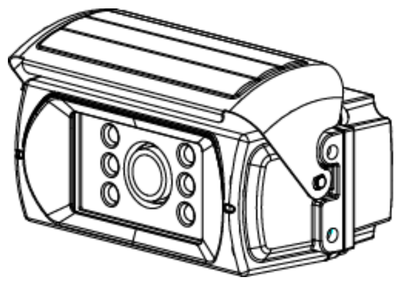

Camera x 1

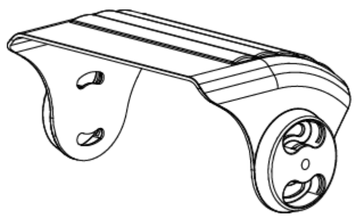

Sunshield x 1

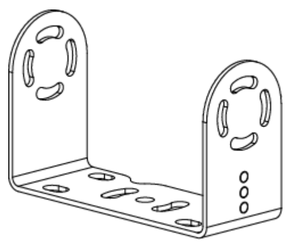

Bracket x 1

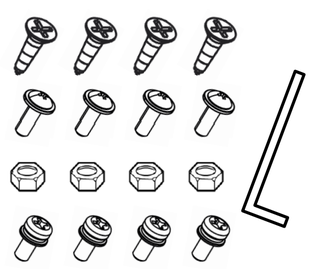

Camera Screw Kit x 1

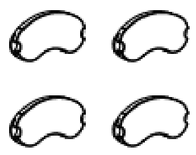

Screw cap cover x 4

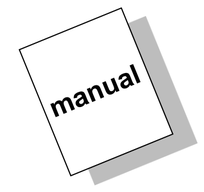

Instruction manual x 1

◈ Features

- 2.07 Mega pixels Full HD SONY CMOS Color camera
- 1/2.8" Color CMOS high resolution image sensor (STARVIS)
- AHD 720P/30fps
- IP69K Waterproof Rating
- Diagonal 136° Viewing
- Normal/Mirror Image switching
- Ultra low light performance ,Built in ICR filter block
- Automatic Electronic Iris ,WDR Function
- Built-in Microphone
- Built-in IR LED's
- Built-in Automatic Heater (below +10°C)
- Temp. -40°C ~ 80°C
- Vibration resistant (10G)
- Auto shutter heating camera
- Motorized shutter (to protect the lens surface)
- Waterproof screw type connector (IP67), 4-pin mini-DIN
- ECE R10.05 approved (EMC)

◈ Technical Specifications

Image Sensor	:	1/2.8" SONY CMOS Sensor (STARVIS)
Effective Pixels	:	2.07 Mega pixels 1920(H) X 1080(V)
Resolution	:	1080 TV lines
Scanning System	:	Progressive
Video Output	:	AHD 720P/30fps
Audio Input	:	High Sensitive C-Microphone
S/N ratio	:	Minimum 48dB (at AGC off)
Minimum illumination	:	0 Lux (IR LED's on)
Power consumption	:	DC 12V, 420mA (Heater on) DC 12V, 332mA (Heater off)
Power range	:	DC 9 ~ 48V
Operating temperature	:	-40ºC to +80ºC
Viewing angle	:	136˚(Diagonal) x 120˚(Horizontal) x 66˚(Vertical)
Dimensions	:	95.9(W) x 43(H) x 67.6(D) mm 109.2(W) x 85.5(H) x 80(D) mm (incl.bracket & sunvisor)
Weight	:	386g (total weight incl. bracket & sunvisor: 524g)

▪ Front View

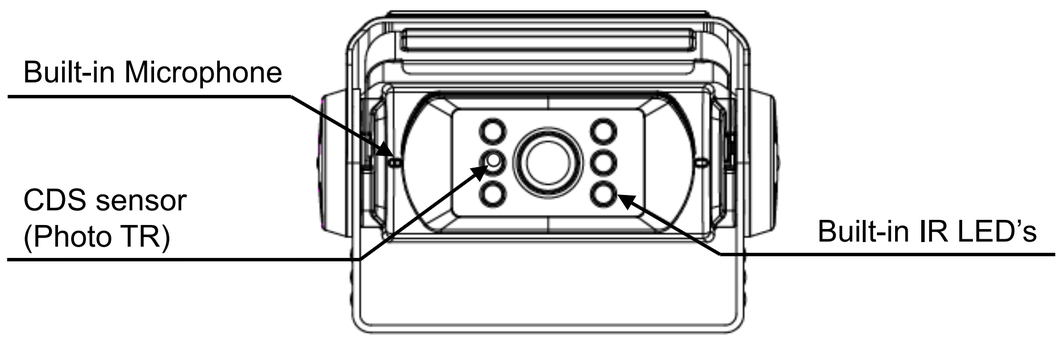

▪ Rear View

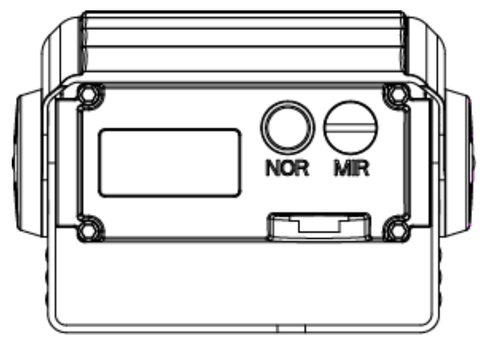

◈ Installation

▪ Camera Assembly

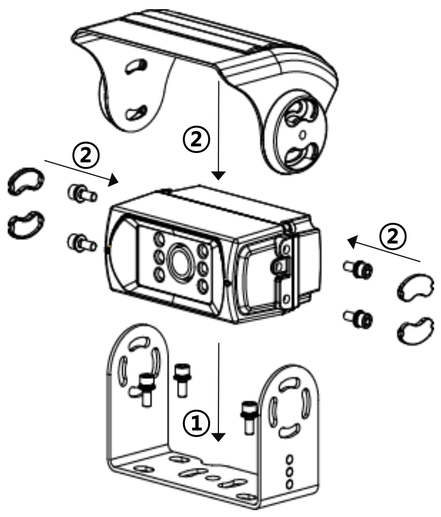

▪ Cable grommet

Drill a suitable hole (approx. Ø 19mm) and insert the cable grommet.
Just before final fixation, please apply a proper sealant (for prevention) between the hole and the grommet and also between the cable and the grommet.

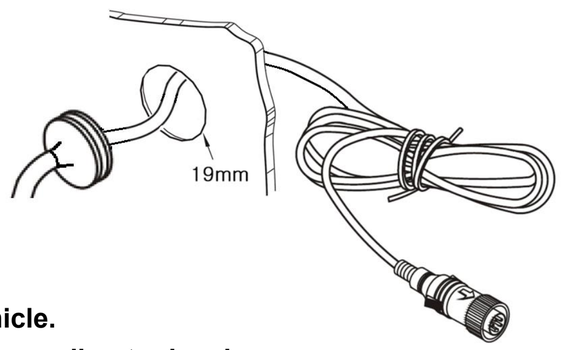

1. Fix the supplied mounting bracket to the vehicle.
2. Fix the bracket with camera and sun-shield according to drawing.
3. Adjust the viewing angle of the camera and fasten the screws firmly.

▪ Wiring to Monitor

Run the cable from the camera to the monitor.

Camera pin configuration

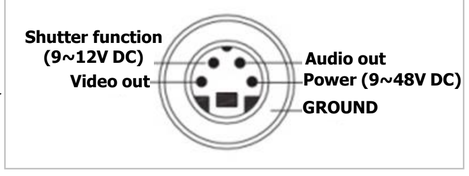

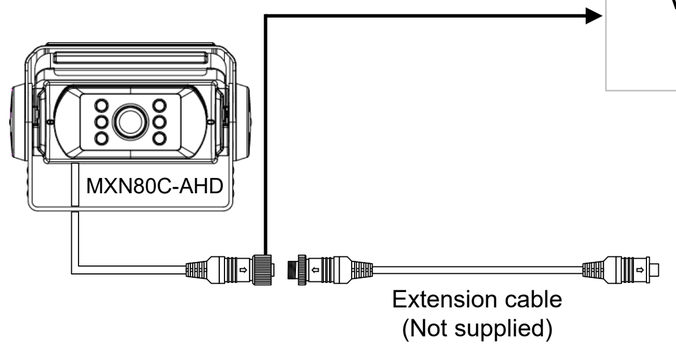



MXN10Q-TVI Monitor
or
MXN10-TVI Monitor

▪ Securing cable connection

1. Match the arrow marks and press the connectors together.

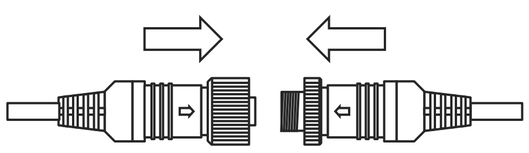

2. Screw the camera connector up clockwise.

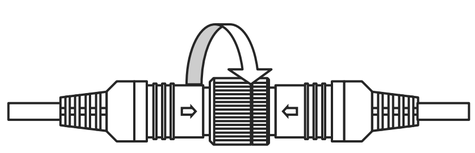

3. Tighten cable connection firmly in order to prevent water ingress.

Note!
The warranty will not be valid if the problem is related to moist / corrosion in the connector.

▪ Caution !!

1. **Before making the connection, disconnect the ground terminal from the battery to avoid short circuits.**
2. **The plugs should be fully inserted into the connectors or jacks. A loose connection may cause malfunctioning of the unit.**
3. **A damaged cable may affect the operation of the camera and may even cause a malfunction of the camera or monitor: Avoid a damaged cable!**
4. **Protect the cable by using a guide tube, pipe or run the cable inside the vehicle as much as possible. Caution! Run the cable in natural shapes in order to prevent cable breaks.**
5. **Preferably use an acid free grease in between the waterproof screw type connectors and tighten them firmly eachother.**

*** Design And Specifications Are Subject To Change Without Notice.**